Build-In System PHARMadapt EPA

Application / Specified Usage

- Aseptic process connection for applications in pharmay and biotechnology
- Process connection of sensors, especially in pipes with very small diameter
- Suitable for media with and without electrical conductivity

Application Examples

- System for mounting of sensors for production monitoring
  e. g. limit- and temperature monitoring with WIFI water
- Water and waste water treatment

Hygienic Design / Process Connection

- By using Negele build-in system EPA-... will result a measurement point which is aseptic and easy to sterilize
- Easy demounting for cleaning and calibration with clamp system
- Dead spot and gap free build-in system
- Sealing system with easy replaceable elastomer sealing ring (EPDM)
- CIP-/ SIP-cleaning up to 150 °C possible (depends on sensor)
- All wetted materials compliant to FDA
- 3-A compliant with diameter ≥ DN25, ISO20, ASME1"

Features

- Quick and easy to install with an orbital welding machine
- From pipe diameter DN10
- Independent of pipe diameter - only two sizes of sensor connection neccessary
- Measurement point with integrated leackage hole
- Negele sensors and build-in system with predefined and aligned build-in length
- Material certificate 3.1 in scope of delivery

Options / Accessories

- Various pipe standards available (DIN 11866, ISO 1127, ASME BPE)
- Surface quality R_a ≤ 0.6 µm and 0.4 µm, including 3.1 certificate
- Delta ferrite content < 0.5 % and "Baseler Norm II"
- Custom specific labelling, TAG number plate made of stainless steel

Schematic diagram of PHARMadapt sealing principle

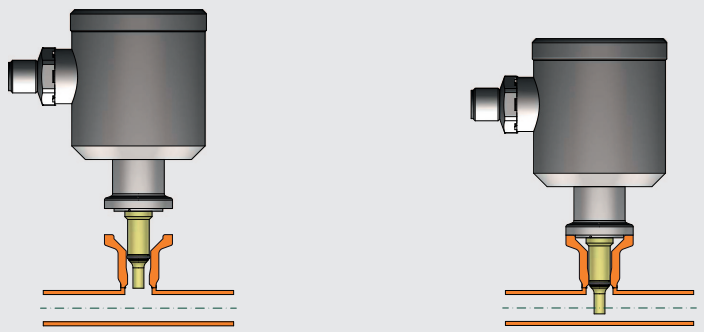

Authorisations

FDA 3-A 74-05

EPA-18 with limit switch

Build-in system EPA-18

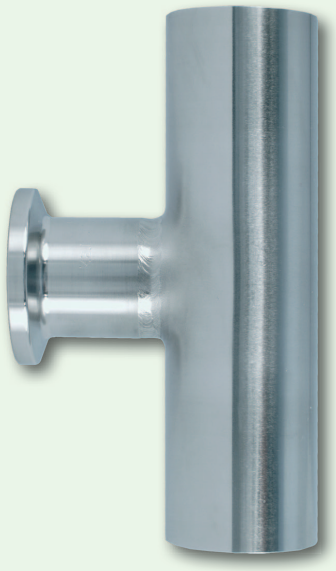

Specification of Measure Point and Adapter

Pipe style		DIN 11866 series A DIN 11866 series B, ISO 1127 DIN 11866 series C, OD-Tube
Material	thermowell pipe pipe	stainless steel 1.4435 (316L) mit 3.1 certificate stainless steel 1.4435 (316L) mit 3.1 certificate stainless steel 1.4404 (316L) with sulphur content acc. to ASME BPE 2009, table DT-3 (only for order option "S")
Surface	wetted parts optional	$R_a \leq 0.8$ µm (not in welded areas) electro polished $R_a \leq 0.6$ µm, $R_a \leq 0.4$ µm
Delta ferrite DF	standard optional Baseler Norm II	< 1.0 % (weld-seam < 3 %) < 0.5 % (weld-seam < 3 %) BN II
Sulfur content at pipe edges	standard acc. to ASME	0.030 % max. 0.005 % min., 0.017 % max.
Diameter	see tables	
Tolerances	pipes with DN10...DN40 pipes with DN50...	±0.3 mm, length: ±1.0 mm ±0.5 mm, length: ±1.0 mm
Sensor connection	EPA-8 EPA-18	SRC-05 clamp ring DN10...20 SRC-10 clamp ring DN25...40
Sealing principle	sealing ring	EPDM, FDA compliant, USP Class VI
Operating pressure		10 bar max.

Advice

The technical specification of pipes is according to DIN 11866 if no other is defined.
Delta ferrite values are valid for delivery condition.
Mechanical treatment after delivery can increment the Delta ferrite value.

Build-in system EPA-18

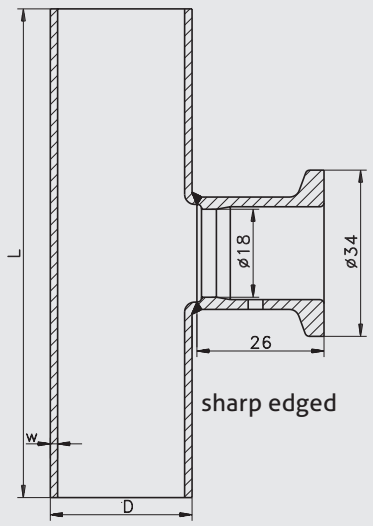

Build-in system EPA-8

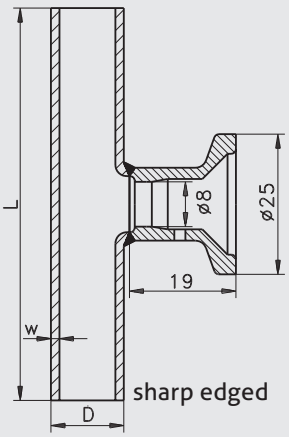

DIN 11866 series A				
Type	**DN**	**L [mm]**	**Rohr D x w**	**suitable for**
EPA-8 / A / 10	10	70	13 x 1.5	NCS-6xP, TFP-6... / 010
EPA-8 / A / 15	15	70	19 x 1.5	NCS-6xP, TFP-6... / 010
EPA-8 / A / 25	25	100	29 x 1.5	NCS-6xP, TFP-6... / 025
EPA-8 / A / 32	32	110	35 x 1.5	NCS-6xP, TFP-6... / 025
EPA-8 / A / 40	40	120	41 x 1.5	NCS-6xP, TFP-6... / 025
EPA-8 / A / 50	50	160	53 x 1.5	NCS-6xP, TFP-6... / 025
EPA-8 / A / 65	65	210	70 x 2.0	NCS-6xP, TFP-6... / 050
EPA-8 / A / 80	80	260	85 x 2.0	NCS-6xP, TFP-6... / 050
EPA-8 / A / 100	100	310	104 x 2.0	NCS-6xP, TFP-6... / 050

DIN 11866 series B / ISO 1127				
Type	**DN**	**L [mm]**	**Rohr D x w**	**suitable for**
EPA-8 / B / 8	ISO8	64	13.5 x 1.6	NCS-6xP, TFP-6... / 010
EPA-8 / B / 10	ISO10	68	17.2 x 1.6	NCS-6xP, TFP-6... / 010
EPA-8 / B / 15	ISO15	72	21.3 x 1.6	NCS-6xP, TFP-6... / 010
EPA-8 / B / 20	ISO20	110	26.9 x 1.6	NCS-6xP, TFP-6... / 010
EPA-8 / B / 25	ISO25	120	33.7 x 2.0	NCS-6xP, TFP-6... / 025
EPA-8 / B / 32	ISO32	130	42.4 x 2.0	NCS-6xP, TFP-6... / 025
EPA-8 / B / 40	ISO40	130	48.3 x 2.0	NCS-6xP, TFP-6... / 025
EPA-8 / B / 50	ISO50	180	60.3 x 2.0	NCS-6xP, TFP-6... / 025
EPA-8 / B / 65	ISO65	220	76.1 x 2.0	NCS-6xP, TFP-6... / 050
EPA-8 / B / 80	ISO80	260	88.9 x 2.3	NCS-6xP, TFP-6... / 050

DIN 11866 series C / OD-Tube / Dimensions acc. to ASME BPE				
Type	**DN**	**L [mm]**	**Rohr D x w**	**suitable for**
EPA-8 / C / 3/4"	3/4"	102	19.05 x 1.65	NCS-6xP, TFP-6... / 010
EPA-8 / C / 1"	1"	108	25.4 x 1.65	NCS-6xP, TFP-6... / 010
EPA-8 / C / 1½"	1½"	120.5	38.1 x 1.65	NCS-6xP, TFP-6... / 025
EPA-8 / C / 2"	2"	146	50.8 x 1.65	NCS-6xP, TFP-6... / 025
EPA-8 / C / 2½"	2½"	160	63.5 x 1.65	NCS-6xP, TFP-6... / 050
EPA-8 / C / 3"	3"	170	76.2 x 1.65	NCS-6xP, TFP-6... / 050
EPA-8 / C / 4"	4"	210	101.6 x 2.11	NCS-6xP, TFP-6... / 050

DIN 11866 series A				
Type	**DN**	**L [mm]**	**Rohr D x w**	**suitable for**
EPA-18 / A / 25	25	100	29 x 1.5	NCS-8xP, TFP-8... / 020
EPA-18 / A / 32	32	110	35 x 1.5	NCS-8xP, TFP-8... / 020
EPA-18 / A / 40	40	120	41 x 1.5	NCS-8xP, TFP-8... / 020
EPA-18 / A / 50	50	160	53 x 1.5	NCS-8xP, TFP-8... / 020
EPA-18 / A / 65	65	210	70 x 2.0	NCS-8xP, TFP-8... / 050
EPA-18 / A / 80	80	260	85 x 2.0	NCS-8xP, TFP-8... / 050
EPA-18 / A / 100	100	310	104 x 2.0	NCS-8xP, TFP-8... / 050

DIN 11866 series B / ISO 1127				
Type	**DN**	**L [mm]**	**Rohr D x w**	**suitable for**
EPA-18 / B / 20	ISO20	110	26.9 x 1.6	NCS-8xP, TFP-8... / 020
EPA-18 / B / 25	ISO25	120	33.7 x 2.0	NCS-8xP, TFP-8... / 020
EPA-18 / B / 32	ISO32	130	42.4 x 2.0	NCS-8xP, TFP-8... / 020
EPA-18 / B / 40	ISO40	130	48.3 x 2.0	NCS-8xP, TFP-8... / 020
EPA-18 / B / 50	ISO50	180	60.3 x 2.0	NCS-8xP, TFP-8... / 020
EPA-18 / B / 65	ISO65	220	76.1 x 2.0	NCS-8xP, TFP-8... / 050
EPA-18 / B / 80	ISO80	260	88.9 x 2.3	NCS-8xP, TFP-8... / 050

DIN 11866 series C / OD-Tube / Dimensions acc. to ASME BPE				
Type	**DN**	**L [mm]**	**Rohr D x w**	**suitable for**
EPA-18 / C / 1"	1"	108	25.4 x 1.65	NCS-8xP, TFP-8... / 020
EPA-18 / C / 1½"	1½"	120.5	38.1 x 1.65	NCS-8xP, TFP-8... / 020
EPA-18 / C / 2"	2"	146	50.8 x 1.65	NCS-8xP, TFP-8... / 020
EPA-18 / C / 2½"	2½"	160	63.5 x 1.65	NCS-8xP, TFP-8... / 050
EPA-18 / C / 3"	3"	170	76.2 x 1.65	NCS-8xP, TFP-8... / 050
EPA-18 / C / 4"	4"	210	101.6 x 2.11	NCS-8xP, TFP-8... / 050

Labelling of measurement point

The pipes are labelled with following informations:
· Material, electro polished
· Pipe dimensions
· Charge number of pipe, serial number
· Charge number of weld-on bushing
The weld-on bushings are labeled with following informations:
· Material
· Charge number
All labelling is made with wire printing on the metal pieces.

Customized labelling of package

The package can be labeled with customized informations on request.

Pipe labelling

Example of package labelling

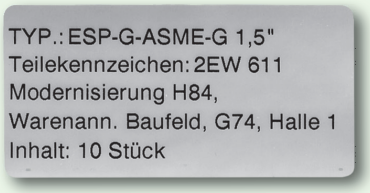

Surface Quality

In order to provide favourable conditions for sterile production, the surface must be smooth and non-porous down into the microscale range. Overlapping areas, or material laminations, must be avoided as far as possible on account of the dead spaces that result, since these areas are difficult or impossible to clean and therefore represent ideal breeding grounds for germs and bacteria.

Moreover, the dimensions (including height!) must be kept as small as possible to minimise the influences of the surfaces in contact with the product. Such surfaces can be obtained by means of electropolishing. In the pharmaceutical sector, but not only there, the quality of the surface is generally defined in terms of the "R_a"-roughness. A surface with $R_a \leq 0.8$ µm is normal, in special cases also Ra ≤ 0.6 µm and even $R_a \leq 0.4$ µm. All these qualities can be achieved by machining appropriately good quality steels and electropolishing them for a sufficiently long period of time. Ra is the arithmetic average of all protuberances on the surface y over a certain measurement distance L in the x-direction.

Inspecition Certificate

Zertifikat

Anforderer:
Boehringer Ingelheim
Pharma GmbH & Co.KG
Birkendorfer Strasse 65
88397 Biberach

Bestell-Nr.: 9943579532/310

Aussteller:
Negele Messtechnik GmbH
Raiffeisenweg 7
87743 Egg a.d. Günz

Auftragsnummer-Nr.: 300869

Werkzeugnis nach DIN 50049-2.2. für EHG-G-ASME-1"

Technische Beschreibung

Typenbezeichnung: EHG-G-ASME-1"
Bauform: T-Stück 25,4x1,65mm
Länge: 100mm

Materialbestätigung

Werkstoff Einschweißhülse: Edelstahl: 1.4435 (V4A) gem. 3.1.B-Zeugnis
Werkstoff Rohr: Edelstahl: 1.4435 (V4A) gem. 3.1.B-Zeugnis

Oberflächenmessprotokoll

Prüfobjektbezeichnende Teile: (Messgerät: TR200/Seriennummer: 554 200 38)
Seriennummer: 0750 Ra 0,092 m
Seriennummer: 0743 Ra 0,369 m
Seriennummer: 0756 Ra 0,084 m
Seriennummer: 0757 Ra 0,096 m
Seriennummer: 0758 Ra 0,111 m

Die angegebenen Meßgenauigkeiten bzw. Materialeisten werden durch unsere Qualitätssicherung gewährleistet.

Ort, Datum: Egg a.d. Günz, 15. November 2005

Unterschriften:
Negele Messtechnik
Qualitätssicherung

negele

Delta Ferrite

The higher the delta ferrite content (DF), the more magnetic phases are present in the austenitic structure. These arise as a result of thermal effects, e.g. during welding and turning. The strain-induced martensite that is formed here leads to increased susceptibility to corrosion for the workpiece and is therefore undesirable.

According to DIN 11866 Table B.1 differentiation can be made between three DF classes:

- Class 1: < 3.0 % delta ferrite in the as-supplied state
- Class 2: < 1.0 % delta ferrite in the as-supplied state
- Class 3: < 0.5 % delta ferrite in the as-supplied state

In order to achieve DF Classes 2 and 3, the tubes must in general be "solution annealed" before delivery. The solution annealing takes place at temperatures between 1020 °C and 1150 °C, depending on the material.
1.4435 stainless steel has a reduced delta ferrite content much lower than 1 % compared with 1.4404. The increase caused by welding processes can be minimised by the use of suitable welding materials, shielding gas, and the correct current, so that the delta ferrite content at least remains below 3 %. If the whole work piece is required to have a delta ferrite content less than 0.5 %, it must be ordered in accordance with "Baseler II Norm".
The reduction of the delta ferrite must not be too excessive, however, because with too low a content there is a tendency for the stainless steel to form cracks during machining or welding.

Inspecition Certificate

Werksbescheinigung 2.2 (nach EN 10204)
works certificate 2.2 (according to EN 10204)

Besteller Negele Messtechnik GmbH *purchaser*	Bestellnummer 4500189694 *order number*
unser Auftrag 22289 *our commission*	Lieferschein 31656 Pos. 1 *delivery note*

Wir bestätigen hiermit, dass der FE-Gehalt (Delta-Ferrit), der mit unserem oben genannten Lieferschein versandten Teile im Lieferzustand ≤ 0,5% (Oberfläche) / ≤ 1% (Schweißnaht) ist.
We hereweith confirm, that the Fe-concentration (delta-ferrite) of the delivered parts, regarding the above mentioned delivery note, is ≤ 0,5% (surface) / ≤1% (welding) at condition of delivery.

Meßgerät: Fischer Feritescope MP3C
measuring device:

Datum 31.01.2006
date

Unterschrift
signature

USP Class VI

Relative new and initialized from US market is a new qualification of product contacting plastics. Primary a requirement from the medical sector this will get a standard of the pharmaceutical industries in the future for a lot of applications. Plastics and elastomers according to the so called USP Class VI standard is suitable for implantation into the human body without any complications. Presently this is the highest requirement to material harmlessness.

USP Class VI

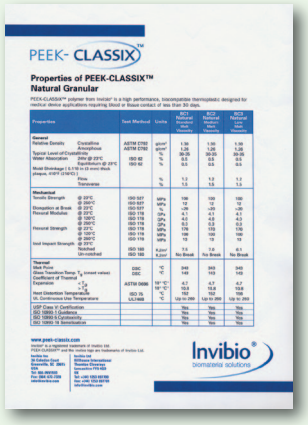
PEEK- CLASSIX™

Properties of PEEK-CLASSIX™ Natural Granular

PEEK-CLASSIX™ polymer from Invibio® is a high performance, biocompatible thermoplastic designed for medical device applications requiring blood or tissue contact of less than 30 days.

Properties		Test Method	Units	BCO Natural Granular (Virgin)	BCO Natural Granular (Virgin)	BCO Natural Granular (Virgin)
General						
Relative Density	Crystalline	ASTM D792	g/cm³	1.39	1.30	1.30
	Amorphous	ASTM D792	g/cm³	1.26	1.26	1.26
Typical Level of Crystallinity			%	30-35	30-35	30-35
Water Absorption	Equilibrium @ 23°C	ISO 62	%	0.5	0.5	0.5
	Equilibrium @ 23°C	ISO 62	%	0.5	0.5	0.5
Mold Shrinkage (3.175 to 12 mm) Mult. plaque, ASMT D955/D						
	Flow		%	1.2	1.2	1.2
	Transverse		%	1.5	1.5	1.5
Mechanical						
Tensile Strength	@ 23°C	ISO 527	MPa	100	100	100
	@ 100°C	ISO 527	MPa	48	48	48
Elongation at Break	@ 23°C	ISO 527	%	>30	>30	>30
Flexural Modulus	@ 23°C	ISO 178	GPa	4.1	4.1	4.1
	@ 120°C	ISO 178	GPa	4.0	4.0	4.0
	@ 200°C	ISO 178	GPa	0.3	0.3	0.3
Flexural Strength	@ 23°C	ISO 178	MPa	165	165	165
	@ 120°C	ISO 178	MPa	108	108	108
	@ 200°C	ISO 178	MPa	13	13	13
Izod Impact Strength	Notched	ISO 180	kJ/m²	7.5	7.5	6.1
	Un-notched	ISO 180	kJ/m²	No Break	No Break	No Break
Thermal						
Melt Point		DSC	°C	343	343	343
Glass Transition Temp. T_g (onset value)		DSC	°C	143	143	143
Coefficient of Thermal Expansion	< T_g	ASTM D696	10^{-6} °C	4.7	4.7	4.7
	> T_g		10^{-6} °C	10.8	10.8	10.8
Heat Distortion Temperature		ISO 75	°C	152	152	152
Continuous Use Temperature		UL746B	°C	Up to 200	Up to 200	Up to 200
USP Class VI Certification				Yes	Yes	Yes
ISO 10993-5 Cytotoxicity				Yes	Yes	Yes
ISO 10993-10 Cytotoxicity				Yes	Yes	Yes
ISO 10993-10 Sensitization				Yes	Yes	Yes

www.peek-classix.com

Invibio® biomaterial solutions

FDA

The „Food and Drug Administration" (FDA) is a US authority that issues approvals for agents, foodstuffs, cosmetics and pharmaceutical products. In addition, it generates recommendations for the use of materials in facilities in the foodstuffs and pharmaceutical industries. This supplementary task is administered because the individual components, materials and design details have significant influence on the quality of the end product.
An "FDA Approval" can only be issued for a product generated in the particular facility in question. For components and materials there is no FDA approval; these parts are "FDA listed" in terms of their innocuousness if in direct contact with the product.
The FDA directives are published as so-called „Codes of Federal Regulations" (CFR...). The 21 CFR 170 – 199 directives have a special significance, in particular with regard to material selection for sensor manufacturers. They contain a listing of specifications for plastics. Thus, 21 CFR 177.2415, for example, contains the plastic PEEK that is often used in the food and pharmaceutical market sectors.

FDA Certificate

Certificate

Conformation of Material

Material: PEEK Polyetheretherketon

We confirm that the material mentioned above is licensed by FDA for the direct use in food and pharmaceutical products without any restriction.

The material is conform with the following guidelines:

FDA registration no. 21 CFR 177.2415
EU guideline 90/128 EWG

Place, date: Egg a.d. Günz, 25th July 2005

Signature: Negele Messtechnik GmbH — Quality Department

negele

ASME

In the pharmaceutical sector one often comes across the requirement to deliver tubes to meet ASME. In most cases what is meant here is simply the tube dimensions with regard to diameter and wall thickness. In this event ASME is identical with the ODT dimensions.
However, ASME BPE also defines a minimum and maximum content for elemental sulphur, which in fact must lie between 0.005 % and 0.017 %. According to ASME regulations this requirement applies, however, just to tube ends that are still to be automatically welded, and not to those that are already welded. The definition of a certain range for the sulphur content makes total sense, since parts with strongly differing sulphur content would deflect the arc during welding and as a result would lower the quality of the weld seam.
Otherwise, the value prescribed in the German Key to Steel or the value defined in AISI for 316L of 0.030 % sulphur content applies.
Comment: ASME BPE specifies not only the sulphur content of the work piece, but also the contents of other materials contained in the steel such as nickel, molybdenum, etc. These, however, essentially correspond to the values in the German Key to Steel, which applies in Europe.

3-A Sanitary Standards

In 1920 three US associations published directives for milk pipe connections. Hence the name 3-A, for 3 Associations.

These organisations are:
- International Association of Milk, Food and Environmental Sanitarians (IAMFES)
- United Public Health (UPH)
- Dairy Industry Committee (DIC)

In 1944 the body of regulations, which in the intervening period had become more comprehensive, was accredited by the US Government. Over 50 standards have been published, primarily for the milk industry. Other sectors, in particular the pharmaceutical industry, are oriented towards these standards or prescribe them as mandatory.

3-A Certificate

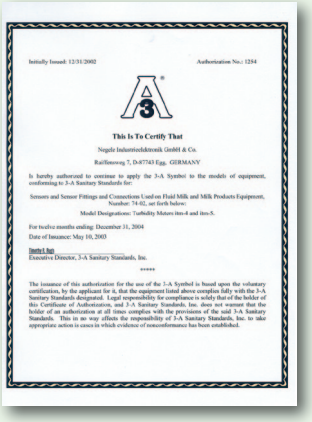
Initially Issued: 12/31/2002 — Authorization No.: 1254

This Is To Certify That

Negele Industrieelektronik GmbH & Co.

Raiffeisenweg 7, D-87743 Egg, GERMANY

Is hereby authorized to continue to apply the 3-A Symbol to the models of equipment, conforming to 3-A Sanitary Standards for:

Sensors and Sensor Fittings and Connections Used on Fluid Milk and Milk Products Equipment, Number: 74-02, set forth below:

Model Designations: Turbidity Meters Itm-4 and Itm-5.

For twelve months ending: December 31, 2004

Date of Issuance: May 10, 2003

Executive Director, 3-A Sanitary Standards, Inc.

*****

The issuance of this authorization for the use of the 3-A Symbol is based upon the voluntary certification, by the applicant for it, that the equipment listed above complies fully with the 3-A Sanitary Standards designated. Legal responsibility for compliance is solely that of the holder of this Certificate of Authorization, and 3-A Sanitary Standards, Inc. does not warrant that the holder of an authorization at all times complies with the provisions of the said 3-A Sanitary Standards. This in no way offsets the responsibility of 3-A Sanitary Standards, Inc. to take appropriate action in cases in which evidence of nonconformance has been established.

Advice

Certificates can be ordered as an additional option with the product order code.
Example: EPA-8 / ... / RAC / DFC

Conditions for a measuring point according to 3-A Sanitary Standard 74-05

- The sensors TFP-641, -661, -681, -841, -861, -881 and NCS-61P, -62P, -81P, -82P are approved according to the 3-A Sanitary Standard.
- Only with the build-in system EPA with pipe diameter ≥ DN25, ISO 20 and 1" allowed.
- The weld must comply to the requirements of the current 3-A Sanitary Standard.
- Mounting position, self draining and the position of the leackage hole must be in accordance to current 3-A Sanitary Standard.

Transport / Storage

- No outdoor storage
- Dry and dust free
- Not exposed to corrosive media
- Protected against solar radiation
- Avoiding mechanical shock and vibration
- Storage temperature -55...+90 °C
- Relative humidity maximum 98 %

Reshipment

- Sensors and process connection shall be clean and free of media or heat-conductive paste and must not be contaminated with dangerous media!
- Use suitable transport packaging only to avoid damage of the equipment!

Cleaning / Maintenance

- In case of using pressure washers, don't point nozzle directly to electrical connections of mounted sensors!

Standards and Guidelines

- You have to comply with applicable regulations and directives.

Order code build-in system PHARMadapt EPA

EPA-8 (Pharma conform build-in system, for sensor connection 8 mm)
EPA-18 (Pharma conform build-in system, for sensor connection 18 mm)

Pipe style
A (DIN 11866 series A)
B (DIN 11866 series B ISO 1127)
C (DIN 11866 series C OD-Tube)

Diameter: see dimension tables page 3 and 4

Surface
0.8 ($R_a \leq 0.8$ µm, standard)
0.6 ($R_a \leq 0.6$ µm)
0.4 ($R_a \leq 0.6$ µm)

Certificate surface
X (without)
RAC (Certificate surface quality)

Delta ferrite- / sulphur content
X (standard: DF < 1 % - class 2)
DF (DF < 0.5 % - class 3)
BN (DF < 0.5 % - Baseler Norm II)
S (material pipe 1.4404/316L, sulphur content acc. to ASME BPE 2009, table DT-3, only weld ends)

Certificate delta ferrite content
X (without)
DFC (Certificate delta ferrite content incl. measurement protocol with 3 measurement points)

EPA-8 / A / 40 / 0.8 / RAC / DF / DFC

Accessories

SRC-05	Clamp-tension ring for EPA-8, material 1.4301
SRC-10	Clamp-tension ring for EPA-18, material 1.4301
BSP-8	Dummy flange for EPA-8, material 1.4435 incl. 3.1 certificate acc. to EN10204
BSP-18	Dummy flange for EPA-18, material 1.4435 incl. 3.1 certificate acc. to EN10204
DRE-5	Sealing ring for EPA-8, Ø 5 x 1.5 mm, material EPDM (FDA compliant)
DRE-15	Sealing ring for EPA-18, Ø 15 x 1.5 mm, material EPDM (FDA compliant)

Clamp-tension ring SRC

Note for clamp-tension ring

The tension ring is not in scope of delivery of sensors or process connection and must be ordered separately.

Dummy flange BSP