THERM-OMEGA-TECH

ISO 9001 CERTIFIED

TV/US-X & -XR

TEMPERATURE CONTROL VALVE

DESIGN FEATURES

- All stainless steel construction
- Narrow temperature band
- Compact low mass - fast response
- Ram-type plug for reliable shut off
- Unaffected by pressure variations
- Quick, easy installation
- Tube compression fitting connections
- Long service life
- Direct acting (no pilot valve)
- ***Thermoloid***® sensor/controller

ADVANTAGES

Models ***TV/US-X*** and ***TV/US-XR*** provide a low cost, effective means of accurate temperature control regardless of available steam pressure or available heating/cooling media temperature. The ***TV/US-X*** and ***TV/US-XR*** valves need no user adjustment and can be installed in minutes, saving time and money in an unlimited number of control applications. ***TV/US-X*** and ***TV/US-XR*** valves are covered with our standard 36 month prorated warranty.

APPLICATIONS

These compact self contained control valves can maintain very tight temperature control of any number of control loops using steam, liquid phase heat transfer media such as Dowtherm®, hot water, hot oil, glycol, compressed air, etc. In general they can be used whenever accurate but low cost control is required. The reverse acting model, ***TV/US-XR*** can be used to control cooling media to economically remove heat from equipment or a process. Controlling air flow to a vortex cooling device is a common application. Another common application is use of the ***TV/US-XR*** to control cooling media flow to a sample cooler in response to sample temperature. Sample heating applications are commonly controlled by the ***TV/US-X***.

OPERATION

The ***TV/US-X*** and ***TV/US-XR*** valves' **Thermoloid**® sensor/controller element may be placed in contact with the process line or pipe with the optional band-o-let fitting, or in the line with the integral 3/4 NPT-M bushing. This allows the temperature element to be in contact with the process to control the valve and regulate the inflow of heating media (or cooling media with the ***TV/US-XR***). Input temperatures or steam supply can vary widely, but the control temperature is maintained within desired limits.

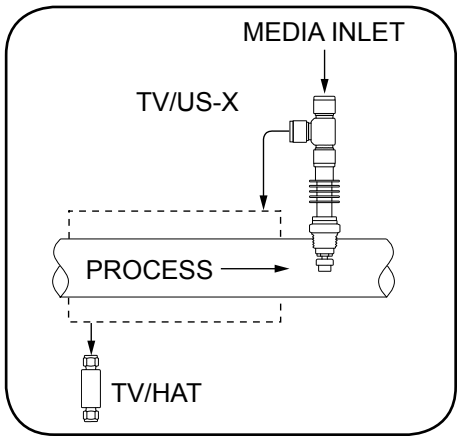

TV/US-X & TV/US-XR

TEMPERATURE CONTROL VALVE

ISO9001:2008 CERTIFIED

PARTS AND MATERIALS

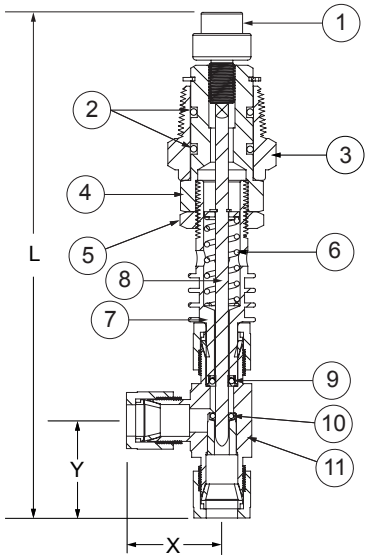

ITEM	DESCRIPTION	MATERIAL
1	THERMAL ACTUATOR	300 SERIES STAINLESS
2	O-RING (NOTE 3)	Viton, EPDM, Kalrez or BUNA-N
3	BUSHING - 3/4 NPT	300 SERIES STAINLESS
4	ADAPTER	300 SERIES STAINLESS
5	LOCKNUT	300 SERIES STAINLESS
6	OPERATING SPRING	300 SERIES STAINLESS
7	YOKE	300 SERIES STAINLESS
8	PLUG/STEM ASSEMBLY	300 SERIES STAINLESS
9	STEM SEAL	PTFE
10	SEAT SEAL	PTFE
11	VALVE BODY	300 SERIES STAINLESS

SPECIFICATIONS

SIZE (NPTF)	L		X & Y		Weight		C_V	Maximum Pressure	Maximum Temperature	
	in	mm	in	mm	Lb	Kg			Valve End	Thermal Actuator End
3/8”	6.2	158	1.20	30	0.6	0.27	0.5	200 PSIG (13.8 BAR)	388°F (198° C)	150°F over setpoint
1/2”			1.42	36			0.9			

TO ORDER SPECIFY:

Part Number	Description
783 - 000000 - XXX	3/8” TV/US-X
784 - 000000 - XXX	1/2” TV/US-X
793 - 000000 - XXX	3/8” TV/US-XR
794 - 000000 - XXX	1/2” TV/US-XR

Note: Parker fittings standard. For Swagelok place a “1” in the 5th number position when ordering.
Example: 783-010000-XXX= 3/8” TV/US-X with Swagelok fittings.

NOTES:

1. Standard open set point temperatures “XXX” available:
For X Series: 035F, 040F, 050F, 055F, 060F, 065F, 075F, 085F, 090F, 095F, 100F, 105F, 110F, 125F, 130F, 140F, 150F, 155F, 160F, 170F, 180F, 190F and 200F.
For XR Series: 040F, 045F, 050F, 060F, 070F, 075F, 085F, 095F, 100F, 105F, 110F, 115F, 120F, 125F, 130F, 140F, 150F, 160F, 170F, 175F, 180F, 190F, 200F and 210F.
Note: Closing temperature is typically 10°F above opening temperature for Direct Acting valves and 10°F below opening temperature for Reverse Acting valves. Consult factory for special higher or lower settings
2. Optional Band-O-Let type attachment fitting must be specified when ordering.
3. Viton is standard unless EPDM or Kalrez is specified when ordering. For EPDM seals, place a “1” in the 6th number position; for Kalrez place a “2”; for BUNA N, place a “3”.
Example: 783-002000-XXX= 3/8” TV/US-X with Kalrez seals.
4. A #20 mesh strainer is recommended for use with all port sizes

Therm-Omega-Tech, Inc. reserves the right to change the design and specifications without notice

THERM-OMEGA-TECH

ISO 9001 CERTIFIED

US/S-X & US/S-XR

SURFACE SENSING TEMPERATURE CONTROL

DESIGN FEATURES

- All stainless steel construction
- Narrow temperature band
- Compact low mass - fast response
- Ram-type plug for reliable shut off
- Unaffected by pressure variations
- Quick, easy installation
- NPT threaded connections
- Long service life
- Direct acting (no pilot valve)
- ***Thermoloid***® sensor/controller

ADVANTAGES

Models ***US/S-X*** and ***US/S-XR*** provide a low cost, effective means of accurate temperature control regardless of available steam pressure or available heating/cooling media temperature. The ***US/S-X*** and ***US/S-XR*** valves need no user adjustment and can be installed in minutes, saving time and money in an unlimited number of control applications. ***US/S-X*** and ***US/S-XR*** valves are covered with our standard 36 month prorated warranty.

OPERATION

The ***US/S-X*** and ***US/S-XR*** valves' ***Thermoloid***® sensor/controller element may be placed in contact with the process line or pipe with the optional band-o-let, or in the line with the integral 3/4" NPT-M bushing. This allows the temperature element to be in contact with the process to control the valve and regulate the inflow of heating media (or cooling media with the ***US/S-XR***). Input temperatures or steam supply can vary widely, but the control temperature is maintained within desired limits.

APPLICATIONS

These compact self contained control valves can maintain very tight temperature control of any number of control loops using steam, liquid phase heat transfer media such as *Dowtherm*®, hot water, hot oil, glycol, etc. In general they can be used whenever accurate but low cost control is required. The reverse acting model, ***US/S-XR*** can be used to control cooling media to economically remove heat from equipment or a process

US/S-X & US/S-XR

SURFACE SENSING TEMPERATURE CONTROL

ISO9001:2008 CERTIFIED

PARTS AND MATERIALS

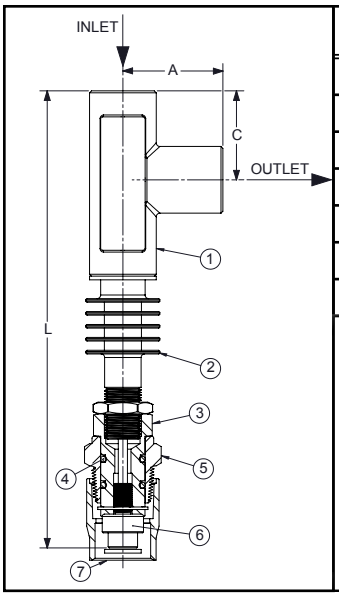

ITEM	DESCRIPTION	MATERIAL
1	VALVE BODY	CF8M (316 SS)
2	THERMAL ISOLATION SECTION	CF8M (316 SS)
3	YOKE	300 SERIES STAINLESS
4	BUSHING SEALS	VITON (STANDARD)
5	3/4" NPT BUSHING	300 SERIES STAINLESS
6	THERMAL ACTUATOR	300 SERIES STAINLESS
7	OPTIONAL BAND-O-LET FITTING	300 SERIES STAINLESS

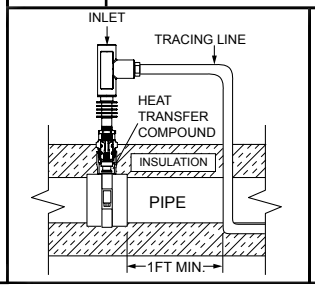

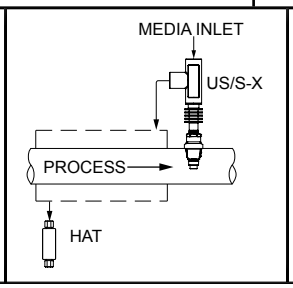

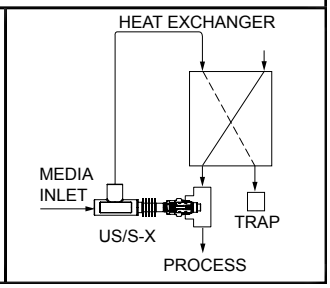

SPECIFICATIONS

SIZE (NPTF)	L		A		C		Weight		C_V	Maximum Pressure PSIG (BAR)	Maximum Temperature	
	in	mm	in	mm	in	mm	Lb	Kg			Valve End	Sensing End
1/2"	7.9	201	1.7	43	1.5	38	1.2	0.55	1.3	200	388°F (198°C)	150°F over setpoint
3/4"	8.7	221	1.8	45.7	1.8	45.7	1.4	0.64	2.0	(13.8)		

TO ORDER SPECIFY:

Part Number	Description
654-000000-XXX	1/2" US/S-X-S
654-010000-XXX	1/2" US/S-X-S-BAND (Note 2)
655-000000-XXX	3/4" US/S-X-S
655-010000-XXX	3/4" US/S-X-S-BAND (Note 2)
664-000000-XXX	1/2" US/S-XR-S
664-010000-XXX	1/2" US/S-XR-S-BAND (Note 2)
665-000000-XXX	3/4" US/S-XR-S
665-001000-XXX	3/4" US/S-XR-S-LP (1/4 GPM)
665-010000-XXX	3/4" US/S-XR-S-BAND (Note 2)

NOTES:

1. Standard open set point temperatures "XXX" available:
   For X Series: 035F, 040F, 050F, 055F, 060F, 065F, 075F, 085F, 090F, 095F, 100F, 105F, 110F, 125F, 130F, 140F, 150F, 155F, 160F, 170F, 180F, 190F and 200F
   For XR Series: 040F, 045F, 050F, 060F, 070F, 075F, 085F, 095F, 100F, 105F, 110F, 115F, 120F, 125F, 130F, 140F, 150F, 160F, 170F, 175F, 180F, 190F, 200F and 210F. ***Note: Closing temperature is typically 10°F above opening temperature for Direct Acting valves and 10°F below opening temperature for Reverse Acting valves.***
2. Includes Band-O-Let fitting
3. 3. A #20 mesh strainer is recommended for use with all port sizes

Therm-Omega-Tech, Inc. reserves the right to change the design and specifications without notice

REGOM INSTRUMENTS s.r.o.
Brabcova 1159 / 2
147 00 Praha 4
CZECH REPUBLIC

Tel: **+420 241 402 206**
Fax: **+420 241 400 290**
Mail: **regom@regom.cz**
Skype: **regom-office**

www.regom.cz