Armaturenwerk Hötensleben GmbH

Operating Instructions

Dirt Trap

Type: DN25 - DN100 / PN10

(Translation)

	Note
	This instruction manual is part of the installation procedure and has to be accessible for operators and maintenance personnel at any time. The safety instructions contained therein have to be observed. In case of a resale of the installation the instruction manual has to be delivered with the installation.

Translation
For deliveries to countries of the European Economic Area (EEA), the assembly instructions are to be translated into an official language of the European Community accepted by the manufacturer of the machine / installation into which these dirt traps are to be integrated. In case of inconsistencies in the translated text, the original assembly instructions (in German) are to be consulted for clarification or the manufacturer is to be contacted.

1. Contents

1.1 Table of Contents

1.2 Table of Pictures

1.3 Declaration of Installation

WH rmatuAnwerk ötensleben GmbH
Schulstraße 5 - 6
-39393 HoetDnsleben

Declaration of Installation

as required by the
- EC Directive: Pressure Equipment Directive 97/23/EC, Annex II A
- EC Directive: Machinery 2006/42/EG, Annex II B

We hereby declare that design of

Description: **Dirt Trap**
Type: **DN25 - DN100 / PN 10**

in its delivered version is consistent with the listed directives and standards (harmonised standards in accordance with the directives):

Guideline/ standard	Title	Version	Comments
DIN EN 62079	Preparation of instructions - structuring, content and presentation	2001	
97/23/EC	**EC Pressure Equipment Directive**	**2003**	
DIN EN 12516-2	Industrial fittings – Shell design strength - Part 2: Calculation method for steel fitting shells	10/2004	
AD 2000 data sheets	Specifications for pressure equipment (national standards)		
The fittings are designed for liquids of fluid group 1 and for gases of fluid group 2. According to this, the nominal diameters are categorised as DN25 – DN100 in accordance with article 3, section 3.			
2006/42/EC	**EC Directive: Machinery**	**2006**	
DIN EN ISO 12100	Safety of machinery - General principles for design - Risk assessment and risk reduction	2010	

If any modifications are made to the non-return valve without our agreement, this declaration is void.

Note:
Commissioning is prohibited until it is certain that the overall system fulfi ls the provisions of the directives. For information about proper use of the fittings, see the operating instructions.

Hoetensleben, of October 24th, 2013

.....
Thomas Erhorn / CEO

Person authorised to compile the technical documentation:
Armaturenwerk Hötensleben GmbH
Mr. Guth, Schulstr. 5 - 6, D-39393 Hoetensleben

2. Overview and Intended Use

2.1 Overview

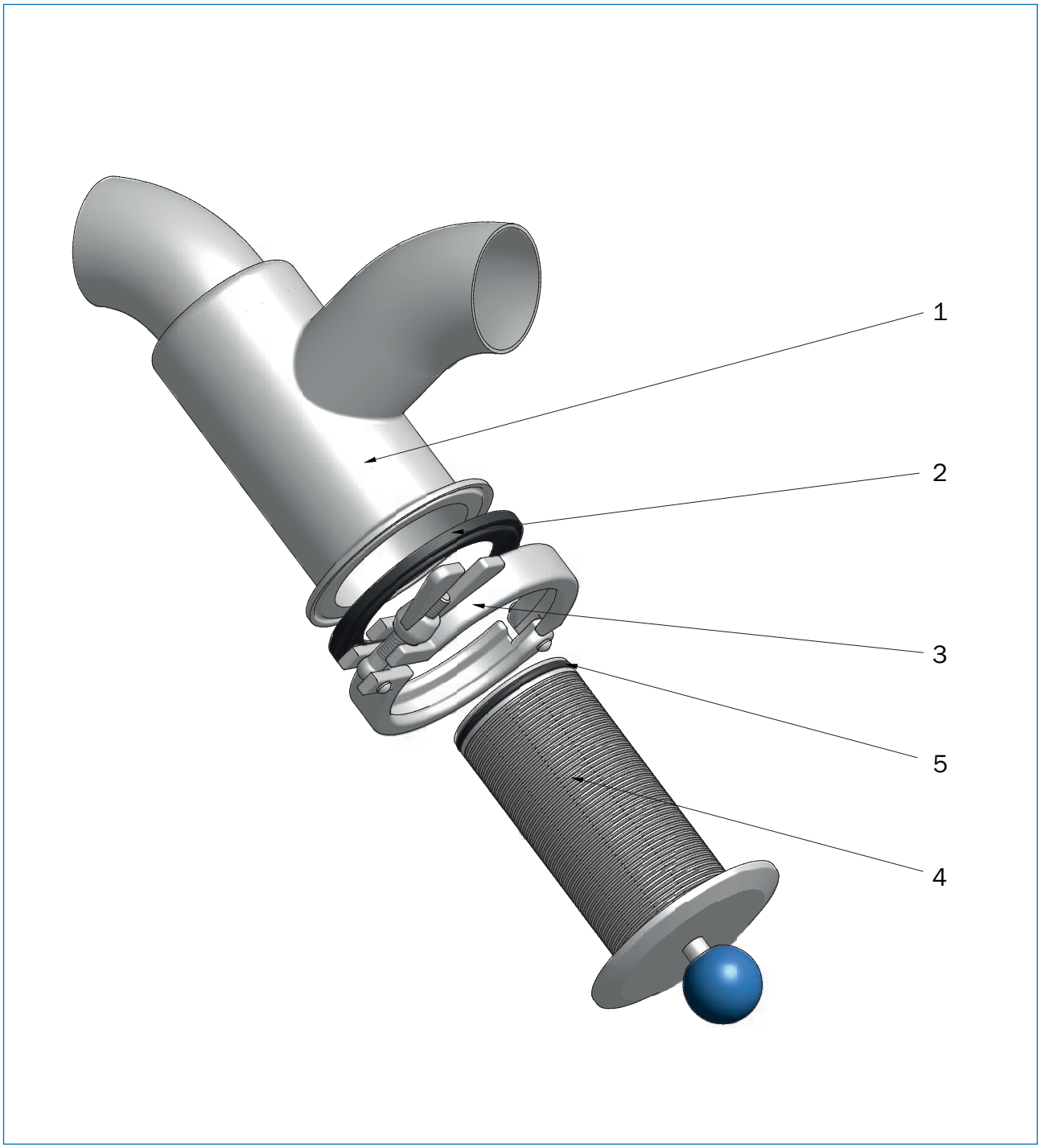

Pic. 2-1 Exploded View

1 Housing
2 Heavy duty clamp
3 Sealring
4 Insert
5 O-ring (only contained in the variant with a gap width of 0.25 mm)

2.2 Intended Use

AWH dirt traps have been specifically designed and manufactured for installation in piping systems with the aim of fitration liquid flow in trade and industrial applications (food industry, chemical industry, pharmaceutical industry and minimum-germ processes).

Fluids intended to be handled include water, steam, mineral oil, foodstuffs, liquids used in chemical and the pharmaceutical industries, which are subject to a hygiene standard.

WARNING

This dirt trap is exclusively intended for the purpose detailed above. Any use other than that outlined above or any modification made to the dirt trap without manufacturer‘s prior written authorization shall be considered „not intended“, and the manufacturer shall not accept liability for any damage that may result from such use or modification not intended. The risk involved shall be solely borne by the operating company. The dirt trap must not be commissioned until it has been ensured that all safety devices are functioning and that the installation into which this strainer has been integrated is in conformity with the EU Guidelines.

The „Intended Use“ also calls for meeting the conditions and requirements specified by the manufacturer for operation, maintenance and repair.

The work described in this instruction manual is detailed such that only a specialist can understand and carry out such work.

Expert
A person who, given his/her technical and functional knowledge, and experience, can judge assigned work and realise potential risks and hazards that may exist.

3. Technical Data

3.1 Materials in Contact with the Product

See Pic. 2-1:

Housing (pos. 1)	1.4301 / 1.4307 / 1.4404 / 1.4435
Insert (pos. 4)	1.4404 / 1.4435
Sealring (pos. 3; 5)	selected acc. to operating conditions

Sealing material

EPDM: max. short-time sterilisation temperature: 140 °C
VMQ: max. short-time sterilisation temperature: 130 °C
FKM: max. short-time sterilisation temperature: 130 °C

Max. temperature short-term 15 - 20 minutes, depending on the medium.

CAUTION

The dirt trap's area of application shall always be adjusted to the relevant operating conditions and the materials that come into contact with the product.

Surfaces

Outer surface:	metal bright/polished
Inner surfache in contact with product:	Ra < 0.8 µm (except weld seams and can)

NOTE

For technical datasheet please refer to the current AWH catalogue.

If used with free-from-chlorine potable water, the service life of the strainer will be approx. 10 years.
If used with aggressive media, the service life will be shorter.

3.2 Connection Variants, Type Series, Dimensions

NOTE

Typical connection configurations of the dirt trap are shown below. The mounting position should be done according to the figures. For dimensions refer to the table overleaf.

You can find the technical datas heet on the product pages of the current AWH „Strainers and Sight Glases“ catalogue online or you can request it directly from Armaturenwerk Hötensleben GmbH. The names of the data sheet and the operating instructions must be identical.

butt weld / butt weld

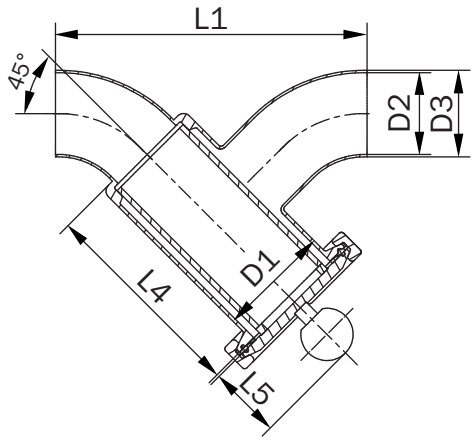

thread / thread

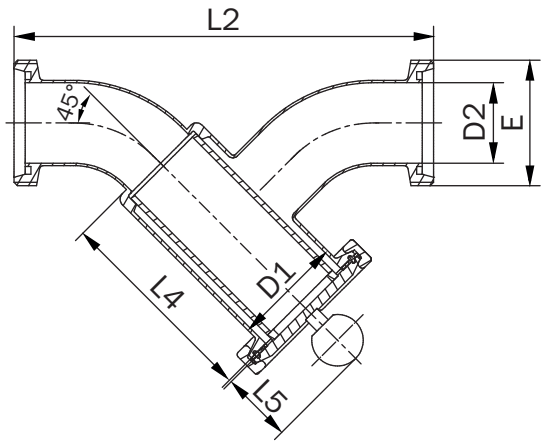

clamp / clamp

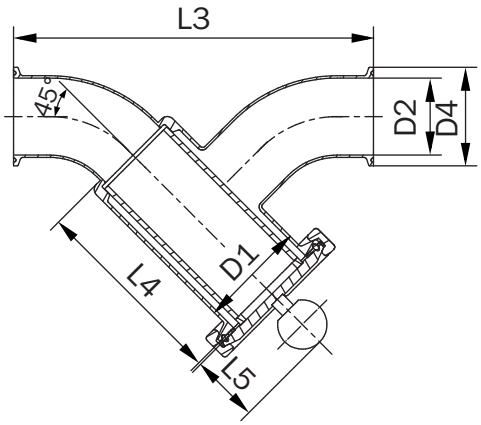

DN	L1	L2	L3	L4	L5	D1	D2	D3	D4	E
25	147	205	190	103.5	45	53	26	29	50.5	Rd 52 x 1/6
40	172.5	240	217	129	45	70	38	41	50.5	Rd 65 x 1/6
50	187	257	230	129	45	70	50	53	64	Rd 78 x 1/6
65	215.5	296	272	149	58	85	66	70	91	Rd 95 x 1/6
80	240.5	330.5	296.5	164	59	104	81	85	106	Rd 110 x 1/6
100	269.5	380	328	189	62	129	100	104	119	Rd 130 x 1/4

Pic. 3-1 Connection Configurations

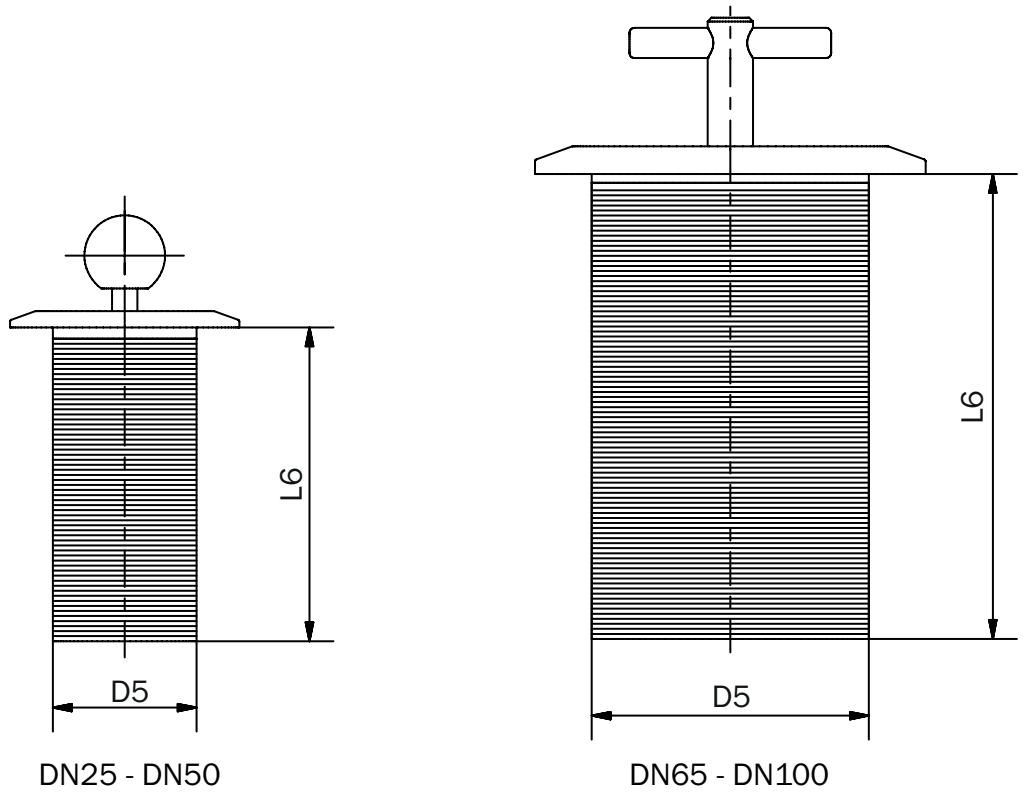

Pic. 3-2 Variants Insert

DN	D5	L6
25	38	100
40-50	57	125
65	73	145
80	85	160
100	110	185

Attention: DN25 - DN50, handle in spherical shape
DN65 - DN100, handle in thumb-grip shape

3.3 General Data

Ambient-temperature range

Min. temperature limit:	+ 5 °C
Max. temperature limit:	+ 90 °C
Max. permissible operating pressure:	10 bar
Max. permissible operating temperature:	depending of sealant in conjunction with operating fluid and cleaning medium

NOTE

Further customisation is possible subject to prior agreement, e.g. dimensions in Inches and SMS and flange connection.

4. Safety / Hazards

4.1 Notes / Explanations

Hazard

„DANGER“ warns about dangerous situations. Avoid such dangerous situations! Otherwise, death or serious injuries are result.

WARNING

„WARNING“ warns about dangerous situations. Avoid such dangerous situations! Otherwise, death or serious injuries may result.

CAUTION

„CAUTION“ in connection with the warning sign warns about serious situations. Avoid such dangerous situations! Otherwise, minor or slight injuries may be the result.

NOTE

„ADVICE“ offers recommended procedures the disregard of which will not result in personal injury. However, follow this advice to avoid material damage and problems!

NOTE

The **installation instructions** are binding;
indicated by a book symbol.

Hazard

This symbol indicates **crushing** hazards.

Hazard

This symbol indicates a risk of **burning**.

NOTE

Environmental symbol
This marks measures to protect the environment.

4.2 Labelling of the Dirt Trap

The information in these operating instructions only applies to the dirt trap of the type and version specified on the title page.

If you have any queries, specify the following correctly:
- the nominal diameter (DN)
- the sealing material
- the body material
- the connection types (butt weld/butt weld, threaded, clamp/clamp)

This is the only way to ensure efficient, quick processing.

4.3 Safety Measures (to be executed by the operator)

Note that
- The user needs to train his operators and maintenance personnel and supervise same with regards to their adherence to the safety regulations including the wearing of personal protective gear.
- The user has to make sure that any access of the dangerous area(s) of the machine (into which the dirt trap was incorporated) by unauthorized personnel (no operators or maintenance personnel) is prevented.
- The assembly of the dirt trap must not be carried out unless the pipes have been emptied.
- The disconnection of the energy sources has to be made in such a way technically as to ensure that the shutdown procedures listed in point 5.4 can be executed.

This instruction manual has to be stored for future use. It has to be available near installation into which the dirt trap installed incorporated. The prescribed frequency of inspections and control checks must be observed.

The work described in the sections on **transport, installation, assembly, maintenance, malfunction / cause / remedy** shall only be carried out by experts.

Expert
A person with appropriate training, suitable instruction and experience who is in a position to identify risks and avoid hazards.

4.4 Operator's Duties

	NOTE
	Within the EEA (European Economic Area) the national implementation of the outline directive (89/391/EWG) as well as the related individual guidelines and of these the guideline (2009/104/EG) on the minimum provisions for safety and health protection in the use of working materials by employees during their work in particular, all in their valid version, have to be observed and adhered to. Within Germany, the regulations on work safety of October 2002 have to be observed.

The operator shall comply with local statutory provisions for:
- safety of personnel (accident prevention regulations),
- safety of work equipment (protective equipment and maintenance),
- disposal of products (waste management laws),
- disposal of materials (waste management laws),
- cleaning (cleaning agents and disposal) and
- environmental protection requirements.
- The installer/operator shall ensure that all flange or pipe unions are leak-proof.
- Tensile and compression stresses shall be ruled out after installation in the pipeline.

In addition, the operator shall ensure
- During maintenance and repair work at the strainer, there is a risk of irritation or burns by residual media and filtered particles.
- When using hazardous materials, protective measures shall be specified in accordance with the safety datasheets and operating instructions shall be compiled for hazardous materials. Personnel shall be instructed in this field. This also applies to hazardous materials that could be produced in the operating process.
- A continuous risk assessment shall be carried out for workplaces, including temperature conditions for the medium and the place of use (falling). The measures shall be recorded in operating instructions and personnel shall be instructed accordingly.
- Supervisors shall monitor compliance with the measures specified in the operating instructions.
- Training of operating personnel shall be ensured.
- Wherever large pneumatic pressures occur, there is a possibility of sudden failure of or damage to the lines and connectors. This poses a hazard.
- The installer of the overall system shall install and provide certification for the control units and safety equipment needed for setting up, checking, shutting down (including emergency shutdown), operating, maintaining, cleaning and repairing the system.
- The operator shall provide technical fire protection equipment, such as appropriate hand fire extinguishers, in sufficient quantities and dimensions at easily accessible points and shall instruct employees in fire safety.
- Warnings from the documentation for supplied assemblies shall be observed and integrated in the workplace-specific risk assessments.
- The operator is obliged to operate the dirt trap in perfect condition at all times.

Connections
Before operating the machine with the strainer, the operator shall ensure that the local specifications were followed during assembly and commissioning, if these were carried out by the operator.

	NOTE
	**Illumination level** The user has to ensure sufficient and uniform lighting in all areas of the installation. The recommended illumination intensity is **300 Lux** (maintenance level; in Germany, the ASR 7/3 applies).

	NOTE
	In accordance with the Ordinance on Industrial Safety and Health (BetrSichV), the operator shall provide its personnel with **safety instruction** at least once a year.

5. Hazard Warnings

5.1 Hazards

The safety systems described and the safety instructions given in this instruction manual must be taken into account and followed, respectively. The dirt trap is designed to be operated manually and locally.

CAUTION

Dirt trap, length and quality of the pipes has to meet the requirements. The assembly is to be checked by qualified personnel. The parameters listed on the datasheet have to be adhered to at all times.

HAZARD

A risk of **burns** exists during the operation or maintenance if flow media are used at temperatures exceeding 60 °C.

5.2 Hazardous Area of the Dirt Trap

The area around the dirt trap has to be kept accessible for the operator.

CAUTION

The **hazardous area** for set-up, maintenance and repair work is 1 m around the machine or vessel. The swivel range of the opening switch cabinet doors is to be taken into account. The operator shall ensure that persons are prevented from entering the **hazardous area** during motion sequences.

5.3 Installing Replacement and Wearing Parts

We express clearly that spare and wear parts that are not delivered by AWH, are neither inspected nor certified or released by AWH either. The installation and/or application of such products can, under these circumstances, modify the constructional specified properties of your machine in a negative way.

NOTE

Damage caused by usage of non-original parts and equipment are excluded from the liability by the company Armaturenwerk Hötensleben GmbH.

5.4 Shutdown Procedures

WARNING

Before cleaning, maintenance or repair work is carried out (by experts only), the following shutdown procedure must always be completed.

1. Switch off power to higher-level plant / machine / device.

2. Seal off the pneumatics
- Close shut-off valve.
- Check that the system is non-pressurised.
- Secure the shut-off valve against opening.

3. Shut off the flow of media, relieve the pressure in the pipelines and then drain them (take particular care with hazardous materials). Check that an inflow of media is prevented and insert dummy discs if necessary. Note that if the media temperatures exceed 60 °C, a cooling off phase must be observed.

Failure to do so could endanger the life and health of personnel.

6. Installation

6.1 Scope of Delivery

	NOTE
	The detailed scope of delivery is provided in the confirmation of order.

6.2 Transport and Packaging

Products from Armaturenwerk Hötensleben GmbH is carefully checked and packed before shipping, however the product may become damaged during transport.

6.2.1 Delivery (including also of spare an replacement parts)

Unpacking
- Remove the protective caps from the pipe connections (if present).
- Remove the packaging residue.

Incoming goods check
- Check that the product was delivered in full against the delivery note!

In the event of damage
- Check the delivery for damage (visual inspection)!

In the event of complaints
If the delivery was damaged during transport:
- Contact the last shipment agent immediately.
- Retain the packaging (for possible checking by the shipment agent or for a return delivery).

Packaging for return delivery
If possible, use the original packaging and the original packaging material.
If neither is available any more, request a packaging company with experts.
If there are any questions about the packaging and transport safety equipment, please contact Armaturenwerk Hötensleben GmbH.

6.2.2 Temporary Storage

Storage in a closed room
Storage conditions
– temperature 10 °C to 45 °C
– humidity < 60 %

6.3 Installation

NOTE

The installation of the dirt trap is carried out in conformity with the structural design of the pipe system and the technical data of the connection variants.

The installation position should correspond to the illustrations in these operating instructions. For the installation dimensions please refer to the scale drawings of the AWH product drawing. The required space for operation and servicing is to be provided. The floor space required for operation and repairs must be guaranteed. Ensure that the flange connection and the pipe or hose connections are tight and leakage-proof.
Tensile and compression stress are to be excluded.

6.3.1 Installation of the Dirt Trap - Installation Position

In order to guarantee the perfect function of the strainer the recommended installation position should be as shown.

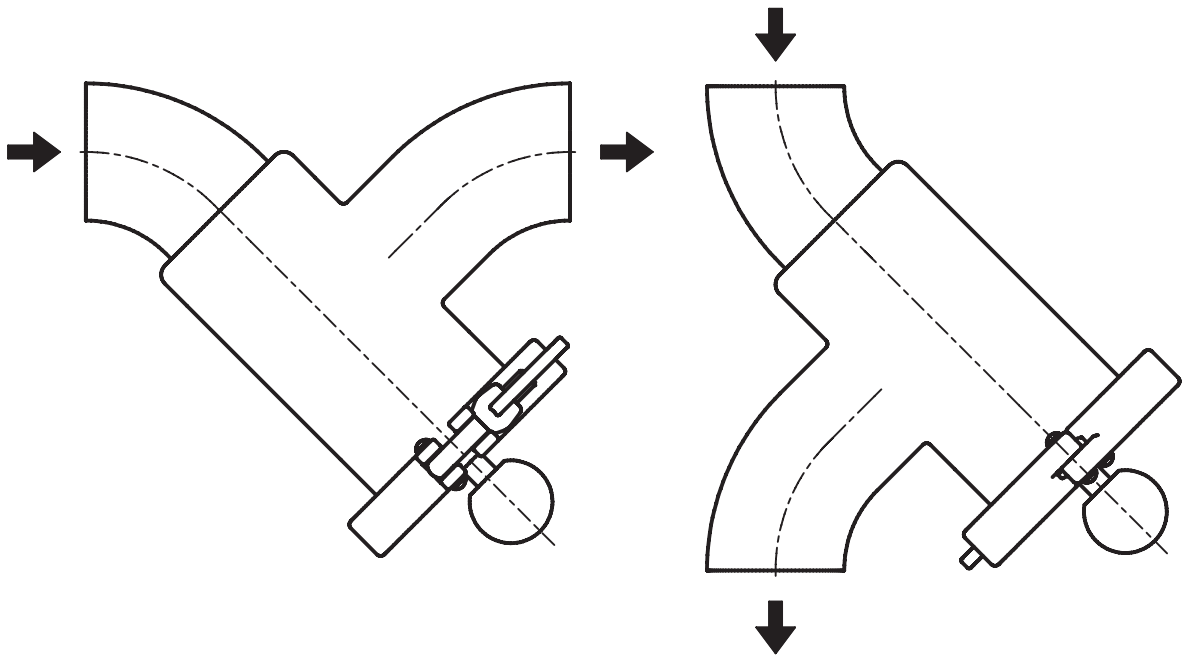

Pic. 6-1 Installation Position

6.3.2 Installation of the Dirt Trap with Thread/Thread

When installing the dirt trap, please keep in mind that the nipples and nuts are required to conform to an identical standard (e.g. DIN 11851 or DIN 11864). Prior to installation, check the sealing ring on the threaded connection for damage as may have occurred, and make sure the sealing ring is properly fitted. Renew sealing ring if necessary. Care must be taken during installation work not to damage the thread. The dirt trap is designed to be mounted by the nut using a nut-wrench. The tightening torque should be strong enough to ensure sufficient leak-tightness.

6.3.3 Installation of the Dirt Trap with Clamp/Clamp

When installing the dirt trap, please keep in mind that the flanges are required to conform to an identical standard (DIN 32676). Prior to installation, check the sealing ring for damage that may have occurred, and make sure the sealing ring is properly fitted. Renew sealing ring of necessary. During assembly, the seal ring has to be guided through the appropriate lip and be located in the correct installation position. The dirt trap is designed to be mounted by the heavy duty clamp.
The tightening torque should be strong enough to ensure sufficient leak-tightness.

6.3.4 Installation of the Dirt Trap with Weldon Ends

Welding guidelines
The welding into pipes is carried out in accordance with DIN 11850.
Welding process: TIG or orbital welding
Weld type: square butt weld to DIN EN 29692

Installed condition
The dirt trap shall be removed before welding (see section on assembly / disassembly).

Weld seam preparation
- Cut the ends of the pipes level and right-angled.
- Remove burrs from the interfaces.
- Align the housing weldon ends with the pipeline so they are level radially and axially. The weldon ends must fit flush and be welded without a gap.

Filler materials

Base materials	Suitable filler materials
1.4301	1.4302, 1.4316, 1.4551
1.4404	1.4430, 1.4455, 1.4576
1.4435	1.4430, 1.4440

Welding
- Connect forming gas before welding.
- Affix 3 to 4 tack welds before welding.

Weld after-treatment
- No treatment is necessary on the interior after welding.
  Accessible areas can be ground.
- The exterior can be treated afterwards by staining, brushing, grinding and polishing.

Cleaning
- Clean all welded parts before assembly.

7. Structure / Function

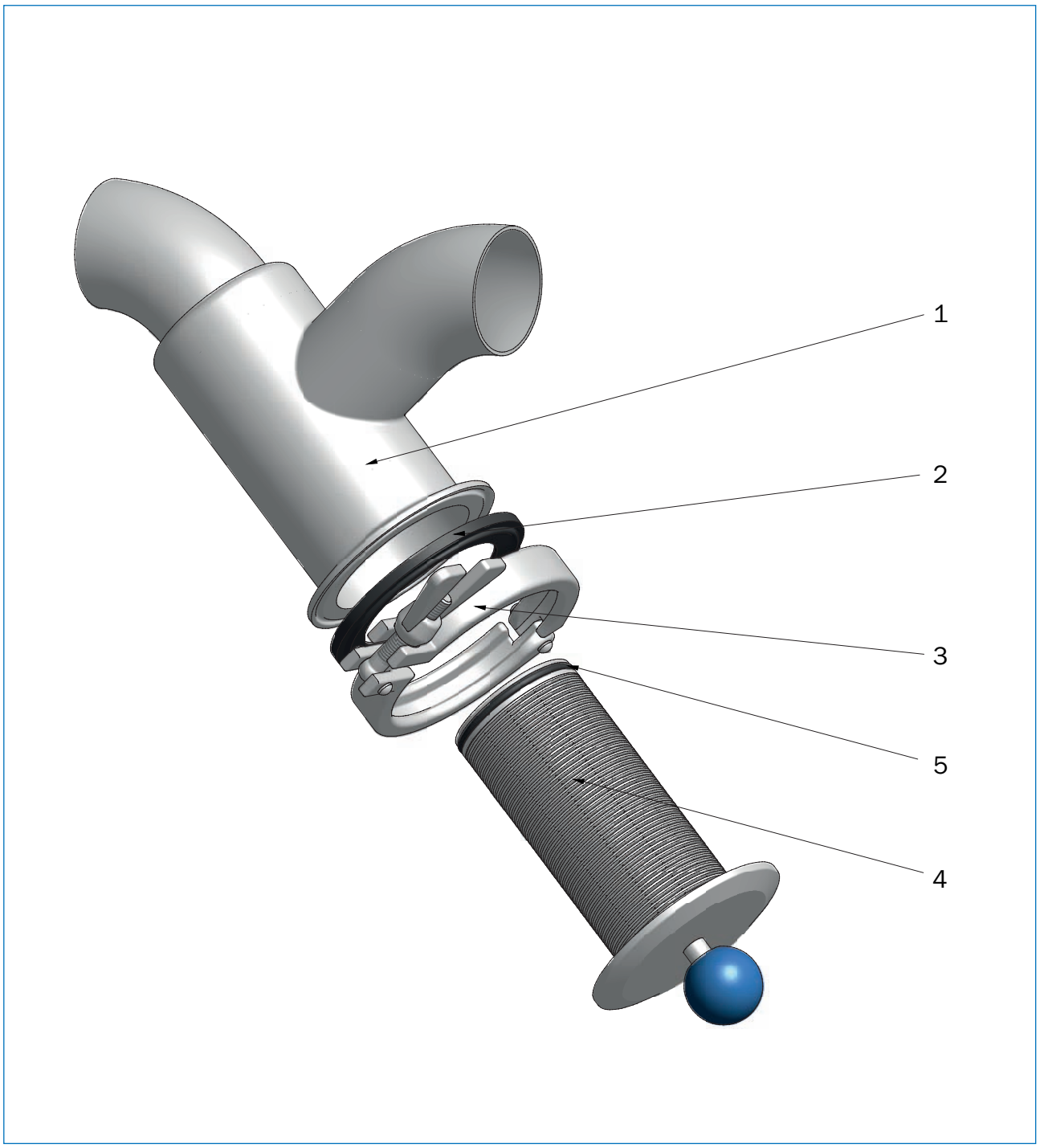

Pic. 7-1 Dirt Trap

1 Housing
2 Heavy duty clamp
3 Sealring
4 Insert
5 O-ring

8. Assembly / Disassembly

8.1 Disassembly from the System

WARNING

Prior to maintenance or repair work it is essential that the shutdown procedure (see section 5.4) be pursued. If the indicated measures do not succeed, please consult the manufacturer of the plant or Armaturenwerk Hötensleben GmbH.

HAZARD

When using hazardous, toxic or otherwise hazardous media like there is a risk of poisoning or chemical burns.

HAZARD

There is a risk of **burning** during operation or maintenance if flow media have temperatures over 60 °C.

To remove the dirt trap from the system proceed as detailed below:

1. Depressurise the piping.
2. Drain the fluid from the piping.
3. Position a suitable collecting tray under the strainer.
4. Remove the heavy duty clamp (Pic. 7-1, position 2).
5. Let residual medium drain.
6. Pull off the filter insert by means of the handle with spherical shape or with thumb-grip shape (Pic. 7-1, position 4) in axial direction out of the housing (Pic. 7-1, position 1).
7. Clean the filter, particularly the shall (Pic. 7-1, position 4)
8. Clean the installation space and carry out an inspection for possible damage.

8.2 Assembly with Packing and Insert Replacement

CAUTION

Exercise care and caution to avoid damage.

Proceed as detailed below:

1. Perform the Shutdown Procedures accordingly 5.4.
2. Inspect the gasket for damage (visual inspection).
3. Clean the assembly area and check for possible damage.
4. Attach the O-ring (Pic. 7-1, position 5) to the can.
   The O-ring is only available for the variant with a gap width of 0.25 mm.
5. Position the seal ring (Pic. 7-1, position 3) at the cover of the insert (Pic. 7-1, position 4).
6. Introduce the filter insert (Pic. 7-1, position 4) carefully into the housing (Pic. 7-1, position 1).
7. Attach the joint clamp (Pic. 7-1, position 2). The tightening torque should be strong enough to ensure sufficient leak-tightness.
8. Carry out a tightness test under operating conditions.

9. Maintenance / Cleaning

CAUTION

The **maintenance and cleaning** section is intended for specialists only. Maintenance, cleaning and repair work may only be carried out by skilled specialist personnel.

CAUTION

Should questions or uncertainty arise in the course of maintenance, please contact Armaturenwerk Hötensleben GmbH.

Periodical cleaning and maintenance of the dirt trap is essential to permit the valve to operate without trouble.

NOTE

Maintenance / cleaning procedures of the individual bought-out components can be taken from the assembly instructions of the respective manufacturers.

WARNING

Prior to cleaning, maintenance or repair work (to be carried out by skilled personnel only), it is essential that the shutdown procedure (see section 5.4) be pursued. If the indicated measures do not succeed, please consult the manufacturer of the plant or Armaturenwerk Hötensleben GmbH.

The insert is designed to be cleaned in the removed condition.

Cleaning fluids:	3 % nitric acid	max. 60 °C
	3 % caustic-soda solution	max. 80 °C

Make sure to
- Clean and chlorine-free water is used.
- Dose carefully and avoid overly strong concentrations of cleaning agent.
- The dirt trap is rinsed with ample clean water once cleaning is completed.

CAUTION

Make sure that cleaning agents are stored in compliance with relevant safety codes. Care should be exercised when handling cleaning agents to ensure that the safety instructions given on the safety datasheets issued by the cleaning-agent manufacturers are followed.
Wearing rubber gloves and safety goggles is an essential requirement to be met when performing cleaning work.
Caution must be used not to touch the dirt trap or the piping when hot fluids are being processed or handled or while the sterilisation process is in progress.

10. Malfunction, Cause, Remedy

WARNING

Prior to maintenance or repair work it is essential that the shutdown procedure (see section 5.4) be pursued. If the indicated measures do not succeed, please consult the manufacturer of the plant or Armaturenwerk Hötensleben GmbH.

Malfunction	Cause	Remedy
Sharp rise in pressure	Filter insert is clogged	Clean filter insert or exchange if necessary
Dirt trap is leaky	Sealing component is dirty or worn	Clean sealing component or exchange if necessary
	Heavy duty clamp not fixed	Tighten joint clamp
Product is not filtered	O-ring has been installed incorrectly	Reinstall the O-ring

The O-ring is only for the version with 0.25 mm gap width available.

11. Emergency

In an emergency:
- Activate the emergency-off function in the higher-level system (press emergency-off button).
- Cut off the flow of media.

12. Disposal

	Note
	The dirt trap mainly consists of steel (except for the seal). For disposal, relevant local environmental regulations must be taken into account. Oils and detergents must be disposed of in conformity with the local regulations and the instructions contained in the safety data sheets of the manufacturers must be observed. Contaminated cleaning tools (brushes, cloths, etc.) have to be disposed of in conformity with the information provided by the manufacturers as well.

	CAUTION
	Make sure that you do not get in contact with liquids hazardous to your health. Always wear personal protective gear (e.g. protective goggles and protective gloves).

regom instruments

flow & process solutions





Potravinářský průmysl
Farmaceutický průmysl
Biotechnologie
Petrochemie
Chemický průmysl
Energetika
Úprava vody
Papírenství a zpracování celulózy
Plynárenský průmysl
Keramický průmysl
Zpracovatelský průmysl





Firma s tradicí od r. 1990 se při svém vzniku zaměřila na dodávky základních komponent, přístrojové a měřící techniky a dodávky technologií pro farmaceutický a potravinářský průmysl. Cílem bylo zajistit kompletní dodavatelsko - inženýrské služby, včetně servisu. V roce 1998, který byl pro firmu velmi významným mezníkem, proběhla transformace společnosti do nynější formy. V dalších letech činnosti společnosti dochází k rozšíření portfolia a je navazována spolupráce s partnery v oblasti armatur, komponent, ventilů, procesní měřící techniky a čerpadel.

Oblastí působnosti je potravinářský, farmaceutický průmysl, biotechnologie, chemický průmysl, petrochemie, úprava vody, papírenství a celulóza, energetika, keramický průmysl a zpracovatelský průmysl.

Firma REGOM INSTRUMENTS je díky širokému dodavatelskému portfoliu a bohatým zkušenostem schopna zajistit dodávky armatur, komponent, čerpadel, přístrojů a zařízení.

Cílem společnosti REGOM INSTRUMENTS je poskytování kvalitních služeb a spolehlivých dodávek pro co nejširší okruh zákazníků.

REGOM INSTRUMENTS s.r.o.
tel.: +420 241 402 206, +420 241 433 152
fax: +420 241 400 290, +420 241 433 151
e-mail: regom@regom.cz
skype: regom-office
www.regom.com

REGOM INSTRUMENTS s.r.o.
Brabcova 1159 / 2
147 00 Praha 4
CZECH REPUBLIC

Tel: **+420 241 402 206**
Fax: **+420 241 400 290**
Mail: **regom@regom.cz**
Skype: **regom-office**

www.regom.cz