HRS Spiratube, S.L. Av. Ciclista Mariano Rojas Nº 52.
Edif. Torre Expomurcia, 3ª Planta 30.009 Murcia, España.
Tel.: +34 968 20 14 88 Fax: +34 968 20 04 61
E-Mail: info@hrs-spiratube.com Web: www.hrs-spiratube.com

HRS-Spiratube GmbH.
Klinikstr. 89, 44791 Bochum, Deutschland.
Tel.: +49 234 9571930 Fax: +49 234 9571931
E-Mail: info@hrs-spiratube.de

HRS Heat Exchangers Limited.
10-12 Caxton Way, Watford. Business Park.
Watford, Herts WD18 8JY, United Kingdom.
Tel.: +44 1923 232 335 Fax: +44 1923 230 266
E-Mail: adeel@hrs.co.uk Web: www.hrs.co.uk

HRS Process Technology, INC.
5958 West Audrey Lane. Az 85308 Glendale, United States.
Tel.: +1 602-938-1123 Fax: +1 602 942 4204
E-Mail: carlosc@hrs-spiratube.com

HRS Process Systems Pvt. Ltd.
Asia Division.
201 / 202 Karan Selene.
851, Bhandarkar Institute Road.
Pune 411 004. Maharashtra - India
Tel.: +91-20-2566 3581 / 82 Fax: +91-20-2566 3583
E-Mail: cthe@hrsasia.co.in Web: www.hrsasia.co.in

tubulars

HRS spiratube

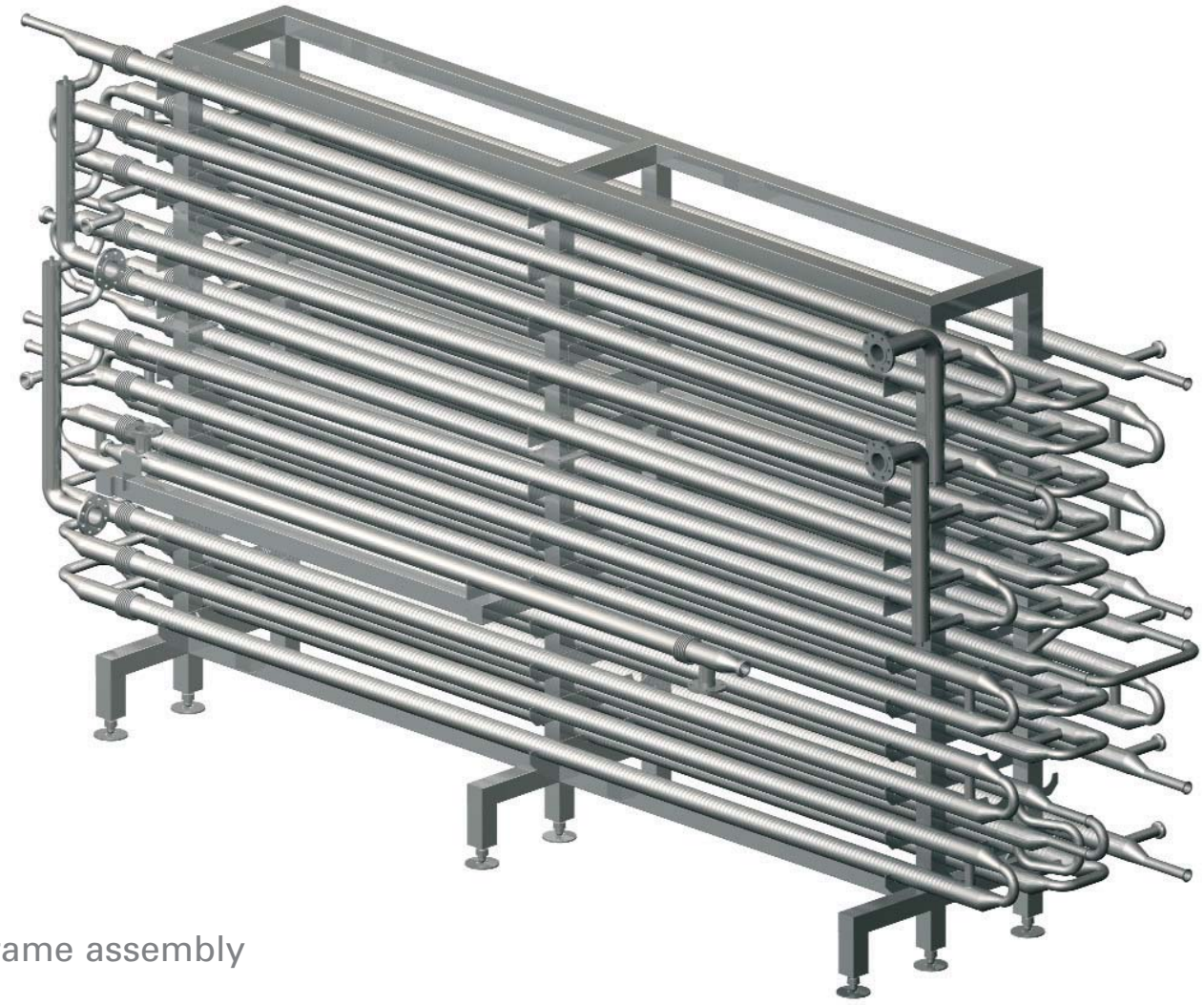

frame assembly

type of corrugation

big dimple

dimple

hard

Introduction

monotube

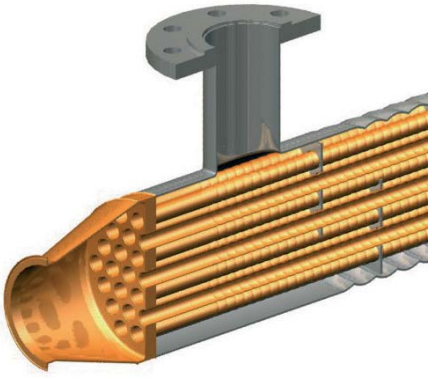

multitube

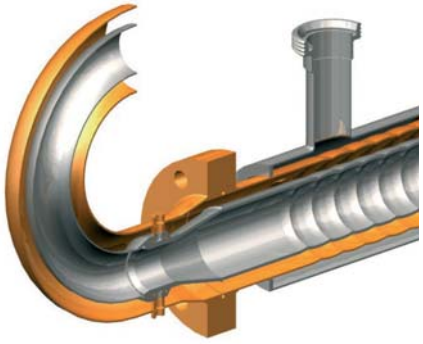

triple tube

Turbulence is the main factor in thermal transfer. HRS has designed different geometries to increase thermal efficiency in tubular heat exchangers by means of corrugation, both inner and outer tubes.

This innovation has the following benefits:

- Reduces thermal treatment time in food applications.
- Reduces the product volume contained in the heat exchanger.
- Reduces fouling.
- Reduces the heat exchanger volume and weight.

Our aim is to improve the efficiency of current geometries.

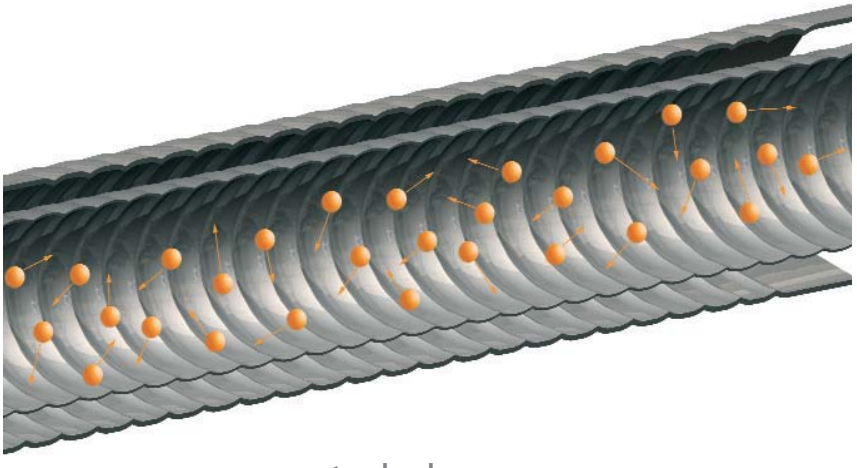

turbulence

Models

MI Food Industry Multitube Heat Exchanger

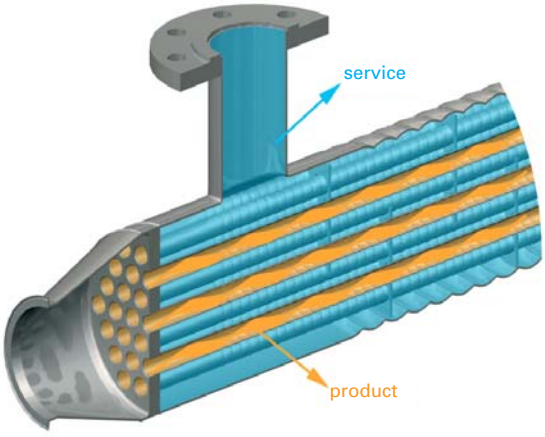

The MI series heat exchanger is an all welded stainless steel multitube heat exchanger (tube bundle within a shell) with the shell and inner tubes corrugated (the standard is hard corrugation) to increase the rate of heat transfer. The hygienic design makes the MI series especially suited for use in the food industry.

The product flows through the inner tubes and the service fluid through the space between the inner tubes and the shell.
The MI series heat exchanger is ideally suited for food applications involving fluids of low to intermediate viscosities and non Newtonian fluids where any particles contained within the fluid are relatively small.

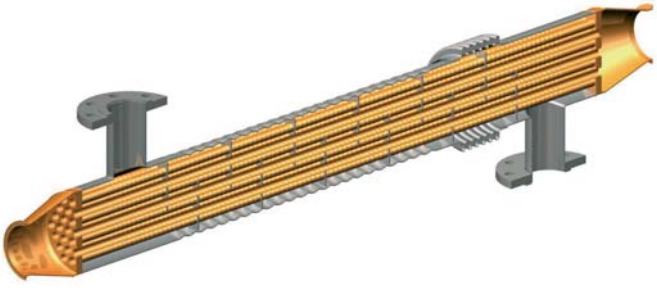

K Industrial Multitube Heat Exchanger

The K series heat exchanger is an all welded stainless steel multitube heat exchanger (tube bundle within a shell) with the inner tubes corrugated to increase the rate of heat transfer. The product normally flows through the inner tubes and the service fluid through the space between the inner tubes and the shell.

The K series heat exchanger is ideally suited for industrial applications involving:

- Liquids and gases.

- Fluids of low to intermediate viscosities and non Newtonian fluids where any particles contained within the fluid are relatively small.

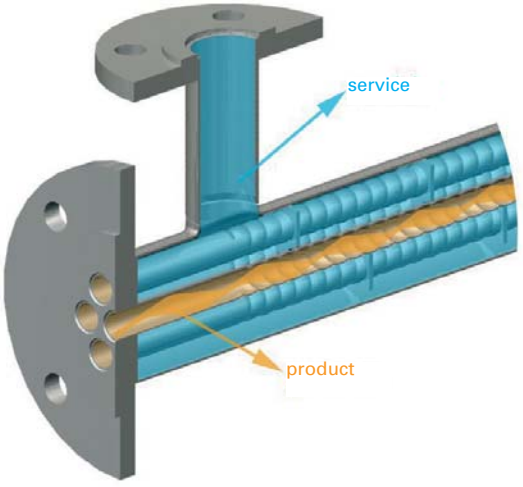

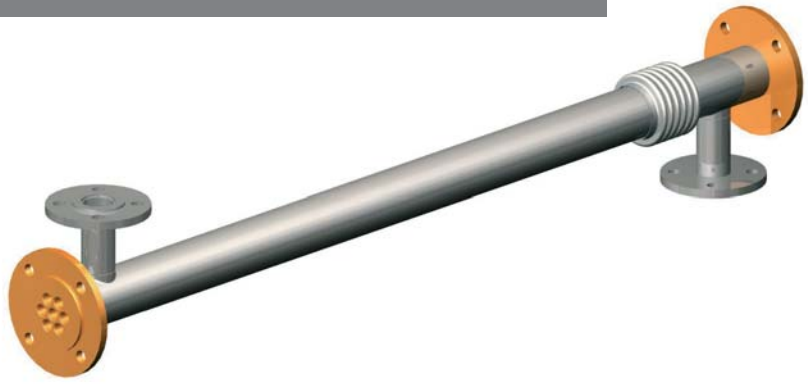

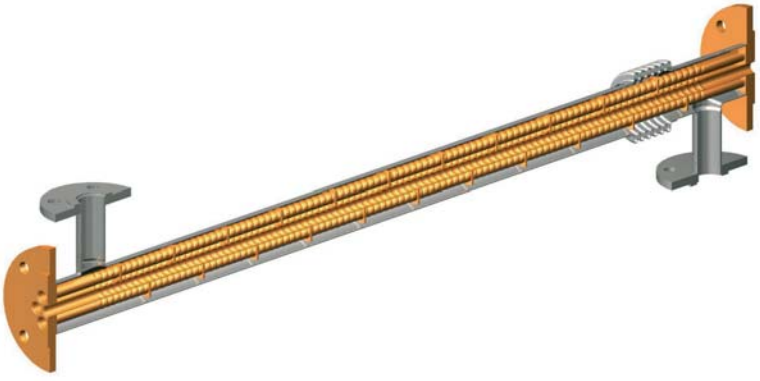

DTI Industrial Double Tube Heat Exchanger

The DTI type heat exchanger is a double tube heat exchanger (tube within a tube). The inner tube has a hard corrugation for increasing the heat transfer. The product flows through the inner tube and the service fluid through the annulus between the inner and outer tube.

Due to the interior cross section the DTI type heat exchanger is suitable for:

- Fluids that contain fibres or other types of solid particles.

- Fluids of low to intermediate viscosities and non Newtonian fluids.

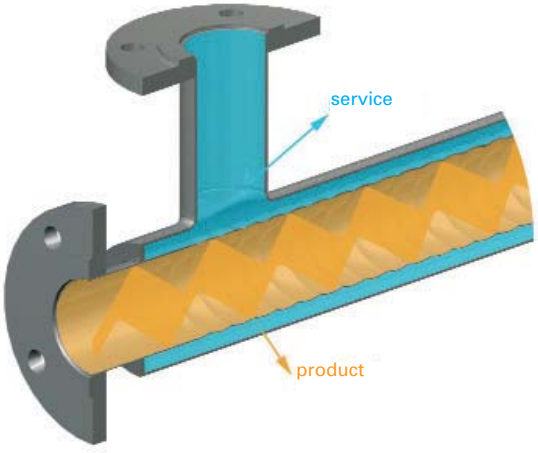

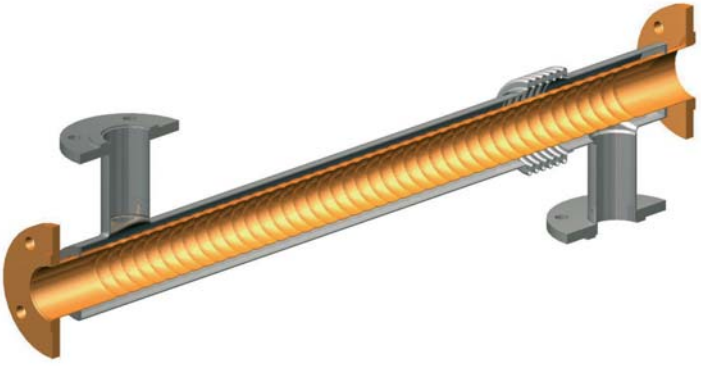

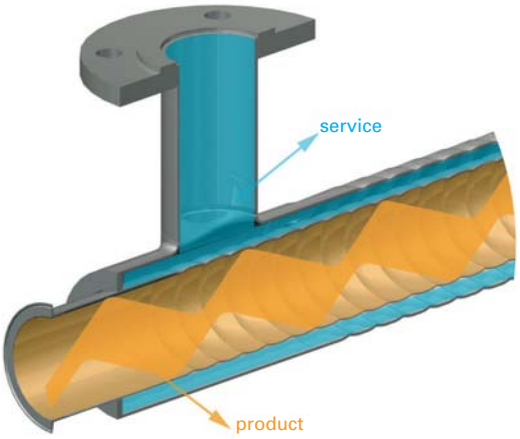

DTA Food Industry Double Tube Heat Exchanger

The DTA type heat exchanger is a double tube heat exchanger (tube within a tube), similar to the DTI type heat exchanger, but with a design that is suited to food industry applications. Both the inner and the outer tube are corrugated for increasing heat transfer. The product flows through the inner tube and the service fluid through the annulus between the inner and outer tube.

Due to the interior cross section the DTA type heat exchanger is suitable for:

- Fluids that contain fibres or other types of solid particles.
- Fluids of low to intermediate viscosities and non Newtonian fluids.

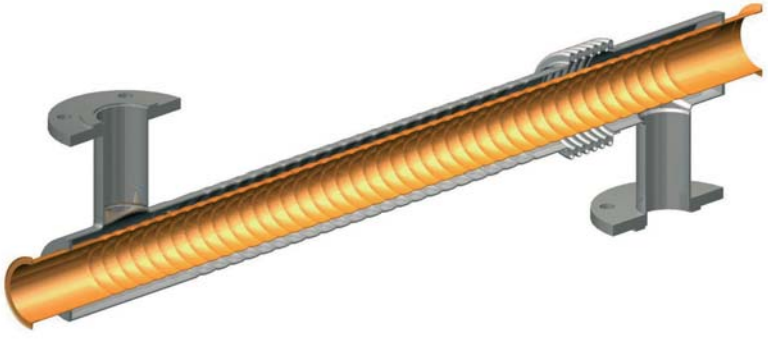

AS Food Industry Triple Tube Heat Exchanger

The AS type heat exchanger is a triple tube heat exchanger (tube within a tube). All tubes are corrugated for increasing heat transfer. The service fluid flows in the annulus between the shell and the second tube and through the third tube. The product flows in the annulus between the second tube and the third tube as shown in the illustration.

The Annular Space heat exchanger is specially suited for:

- Fluids of high viscosity.

- Fluids non Newtonian.

- Fluids that contain small particles.

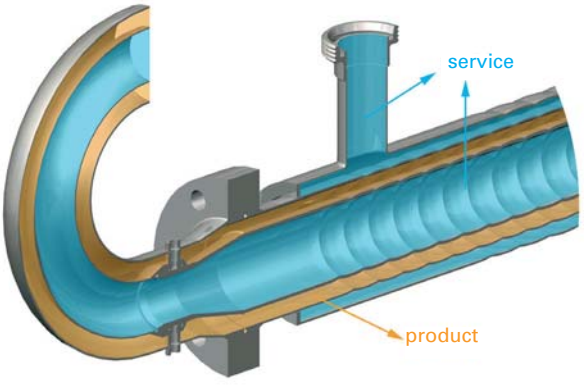

F Series Heat Exchanger Hygienic Unit

The F series heat exchanger is a hygienic unit especially designed for Pharmaceutical and Bio-technological applications. The interior tubes can be corrugated or smooth to facilitate drainage of the product.

The principal characteristics of this model are:

- Double tubeplate to eliminate the risk of cross contamination between the product and service fluids.
- Highly polished surfaces on all product wetted surfaces.
- Construction and component shapes which give crevice free surfaces and eliminate dead areas which would allow bacteriological growth.
- Self draining designs available when required.

Typical applications for this model are: Pharmaceutical and Bio-technological.

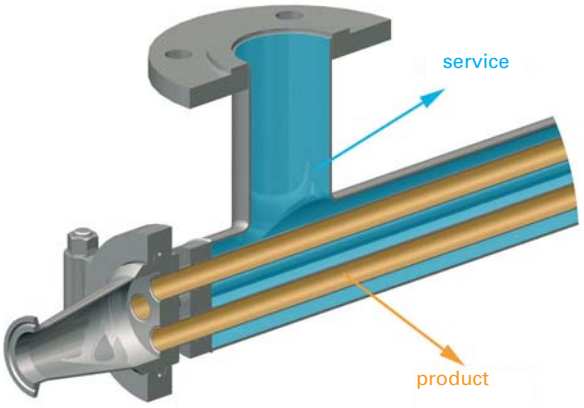

Special Cases

Out of the standard range, we can develop heat exchangers such as:

coil

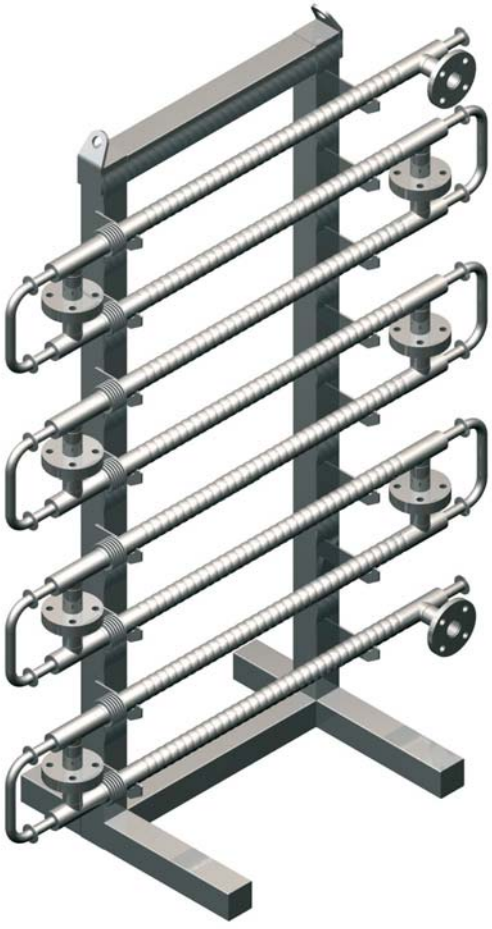

in series or parallel assemblies

Applications

Industrial Applications

Sanitary hot water
Heat recovery
Condensers
Naval engineering
Waste water
Sludge
Solvents

Paints
Varnishes
Lotions
Emulsions
Water/steam
Thermal oils

Hygienic Applications

Fruits and vegetables pulps and dices
Fruit and vegetable creams
Fruit bases
Yoghurt with fruits
Ketchup, tomato bases
Marmalade
Juices and soft drinks
Beer malts
Soups
Wine must
Grapes
Pharmaceutical Injectable
Vegetable fat and oil
Dairy desserts