Hanovia

FOOD+BEVERAGE

PHARMACEUTICALS

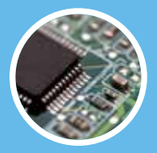

ELECTRONICS

MARINE

AQUACULTURE

POOLS+LEISURE

t: +44 (0) 1753 515 300 e: sales@hanovia.com
Hanovia Ltd, 780 Buckingham Avenue, Slough, Berkshire, SL1 4LA United Kingdom

Visit our website for further information at www.hanovia.com

910321-0001-01 brochure design by Breathe Marketing Limited www.breathe4u.com

Hanovia

the power in UV technology

PHARMACEUTICALS

COSMETICS+TOILETRIES

MEDICAL+OPHTHALMIC

NUTRACEUTICALS

Be sure, make it Hanovia UV
for all your Pharmaceutical needs

pharmaceuticals

biotechnology

pharmaceuticals,

why they're better with Hanovia UV

medical
+ophthalmic

nutraceuticals

fine
chemicals

cosmetics
+toiletries

Why Hanovia? We're trusted

At Hanovia, we think we're a better partner for pharma businesses.

We have enjoyed more than 85 years as a global leader in applying UV technology for chemical free disinfection in the pharmaceutical, healthcare and cosmetics industries.

Industry leaders trust us because we've built up unrivalled experience, deep customer insight, and a complete range of answers for your water treatment needs - no matter what size company you are. And we always deliver the superior performance that comes with validated UV products and services designed from a solid base of UV science and technology, supported right around the globe.

So, you can rely on Hanovia to take care of every detail, and to do it when you need us most.

Understanding the Power of UV Technology

The best solutions are good for everyone. So, we don't just offer clever technology. We make a difference. For you, your clients, and consumers. Hanovia UV systems:

- Provide chemical-free disinfection
- Remove chlorine and ozone
- Are clean and safe, with no side effects or residue
- Offer validated performance
- Are compact and easy to install
- Are simple and inexpensive to maintain
- Are backed by Hanovia's global support network

CONTROL SYSTEM

- The Photon II controller is Hanovia's microprocessor-driven control module
- Menu-driven interface
- Real time display of performance parameters
- Dose computation from fixed or variable flow
- Optional power optimisation 'Power Switching' facility
- Automatic on/off timer

ARC TUBE

- Up to 6 Arc Tubes per chamber
- Simple to replace
- Hanovia is the only UV systems manufacturer to manufacture its own medium pressure arc tubes, for ultimate quality and performance
- All Hanovia arc tubes are manufactured and tested to international standards

MONITOR

- Provides continuous output measurement of each UV lamp in the treatment chamber
- Keeps system running at maximum efficiency
- With any change in process conditions, the system can switch to new power level or initiate a local or remote alarm
- Optional individual monitor for each lamp

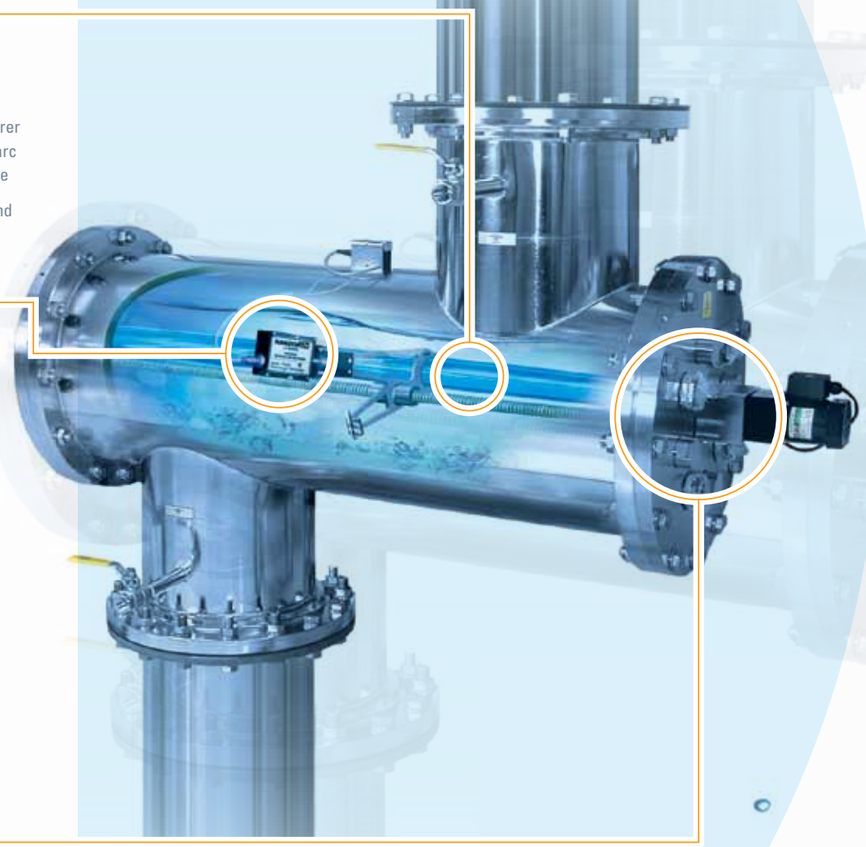

TREATMENT CHAMBER

- Capacity up to 1,800 m3 per hour (7,930 gpm) for a single chamber
- 316L stainless steel construction (even higher grades for aggressive water conditions)
- Hydrostatically pressure tested to PED requirements
- Tri-clamp or flange connections to suit any pipe size
- Quartz sleeves house arc tubes and permit replacement of arc tubes without interrupting flow
- Automatic wiper maintains operational efficiency, even for poor quality water
- Optimum hydraulic design for uniform treatment
- Drain valve

How is Hanovia UV different from all the others?

We don't believe in giving impurities a fighting chance. In fact, we really hate them. So, we go all out to kill every kind of pathogen, and neutralize nasty contaminants. All without chemicals or by products, and all completely safe for your consumers. Think of it as getting the technology of choice, from the manufacturer of choice.

With over 50,000 installed systems, you'd expect excellence. And that excellence is backed by over 85 years of leading the way in UV technology.

Here's the technical bit

At Hanovia, we offer outstanding systems and features, customizable to your exact need.

- Cutting edge low and medium pressure UV lamps
- Astonishingly reliable monitoring, calibration and safety
- Water qualities from <30 to 100% transmittance
- Capacities from <1 to 1,800 m3 / hour
- High solids tolerance
- From pure water to high BRIX syrups
- Chamber types: 'U', 'S' and 'L' shape axial flow, to cross flow
- Meets ISO9001
- Material for wetted parts FDA compliant materials
- Effective against spores, yeasts, molds, algae, protozoa, bacteria and viruses
- Effective against chlorine, ozone and Total Organic Carbon

how Hanovia UV works...

...in pharmaceuticals manufacturing

UV: safer and more reliable

What makes Hanovia UV inherently safer and better? Whilst pathogens can be resistant to chlorine or other treatments, it's physically impossible for them to adapt to UV light. Get the UV system design right, and no organism is immune. At Hanovia we have been getting the design right since 1924, and today our systems are backed by validated UV science and technology. And it doesn't stop at disinfection. Hanovia UV technology is used to remove chlorine and ozone from process waters too. So Hanovia UV provides a clean sweep of biological and chemical contaminants throughout your process.

And with Hanovia, you enjoy the very best in quality and innovation. From sensitive monitors measuring the UV lamps in real-time, to intelligent UV control systems. It's very hi-tech, but reassuringly simple to use.

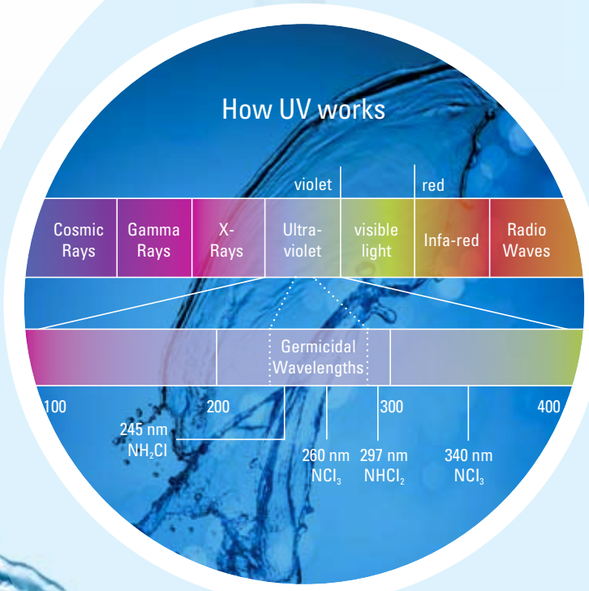

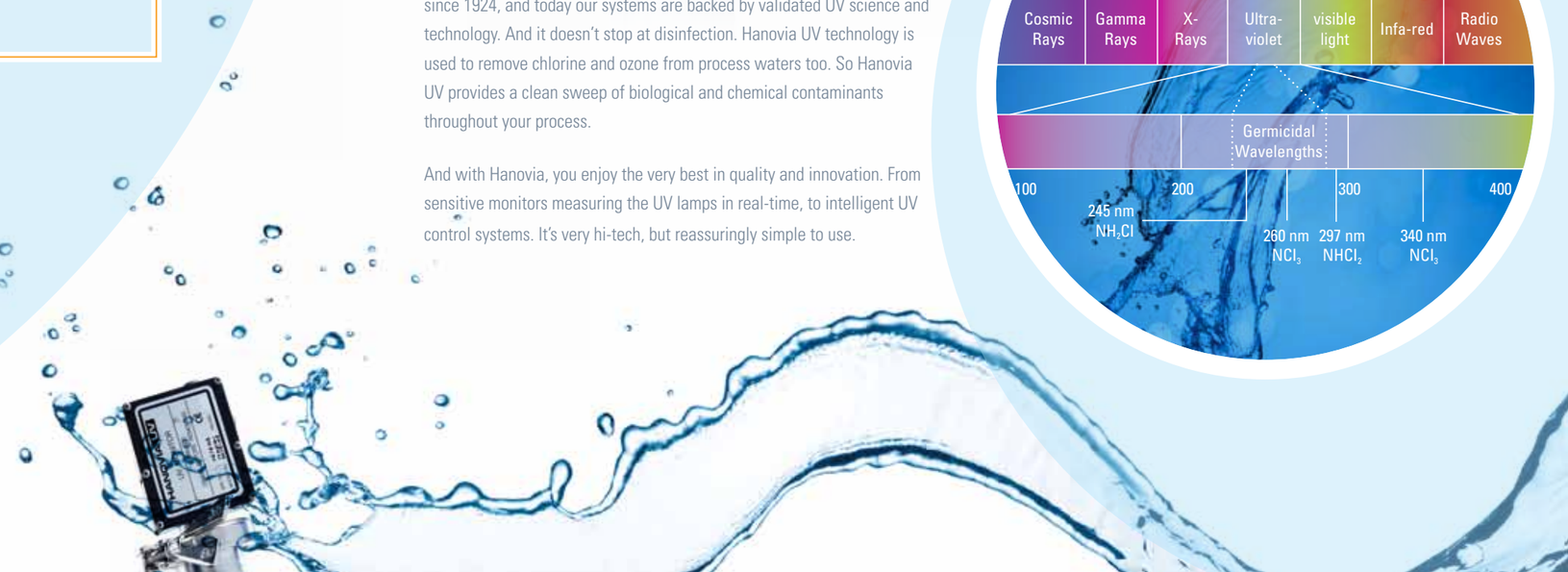

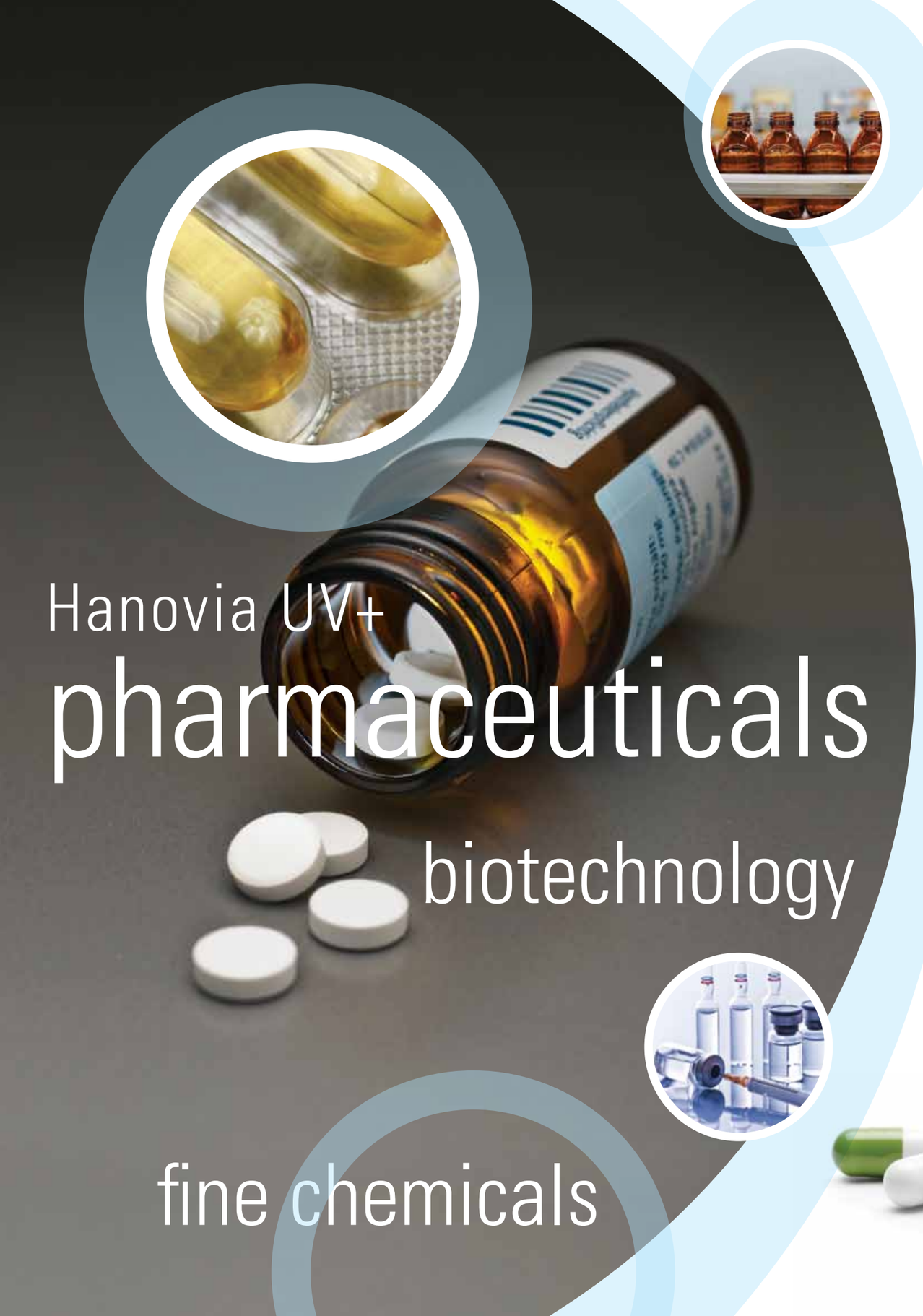

Hanovia UV+ pharmaceuticals biotechnology fine chemicals

Building absolute quality into your manufacturing

UV doesn't just kill germs. It provides the energy that powers particular chemical reactions. It's a wonderful combination, because it means you remove microorganisms and a wide range of contaminants alike. And because UV is the technology of the future, it's as flexible as it is easy to fit and run.

Even better, our specialists help you design and assist with planning for each Hanovia UV system. Because, when your pharma manufacturing relies on sterile conditions, we want you to be certain you can rely on complete control. It's more than a helping hand - it's the certainty that comes from a world leader.

The solution pharma demands

With this much flexibility, it's no surprise that our UV systems sterilise everything from production lines and packaging facilities to water intakes and header tanks.

- Fully automated with failsafe mechanisms
- Compatible with CIP procedures
- Less capital intensive, with lower running costs than other technologies
- Effective against all known microorganisms
- Continuous monitoring and treatment records
- All systems include disinfection chamber, Arc tube, Control / Power Supply Cabinet, UV Monitor and option for Automatic Wiper

a superior disinfection alternative...

...de-chlorination and de-ozonation too...

Chosen by the best, right around the world

We understand that total quality control is vital. So, we manufacture all our stainless steel chambers, arc tubes, and control systems - to the highest possible standards. And because we're at the leading edge, we're the only UV systems manufacturer that makes Medium Pressure Arc Tubes.

We don't stop there, - every system fully tested before dispatch. And we go out of our way to ensure you can rely on complete monitoring of your UV systems once they're in place. So, when you select Hanovia, you really can be sure of what you're getting.

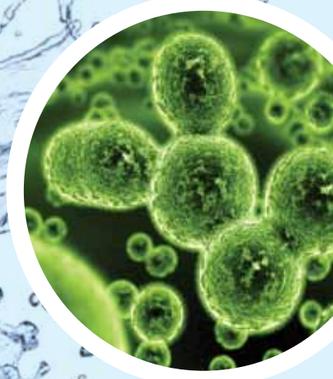

Responding to your needs

We make no apologies for believing that cosmetics and toiletries deserve the best. And we're proud to have worked with some of the most capable and dynamic firms in the sector, in numerous countries.

They help us to stay at the top of our field - working closely with our engineers, providing data to refine our technology. With their feedback and suggestions, we've created some of the best UV systems in the world for cosmetics and toiletries manufacturing. In our view, the very best.

It's a virtuous circle, and it works. We'd like you to be part of it.

Looking good with Hanovia UV

With Hanovia UV, the benefits are more than skin deep. We give you a competitive edge, for enhanced performance and production.

- Unlike other technologies, kills all known microorganisms
- Effective against chlorine, ozone and Total Organic Carbon
- Use throughout your process from incoming water right through to point-of-use
- Disinfected RO feed water ensures reduced CIP and longer membrane life
- Products have longer shelf lives
- Scalable, flexible and adaptable
- No residues, no taints, and completely safe for consumers
- Adaptable to a wide variety of production lines

purified to the highest standards...

...Hanovia UV's looking more attractive by the minute

Why cosmetics and toiletries producers are simply made up with Hanovia UV

You can get the most from our years of co-operation with world leaders like L'Oréal, GSK and Johnson & Johnson. They understand the millions of hours Hanovia's experts have devoted to making our product line what it is today: the smartest and most effective way to produce taint-free, safe, high-quality toiletries and cosmetics.

With wide applications, user-friendly controls and robust reliability, we help you to get more from your investment. No other UV firm has Hanovia's unique insight into the best ways to manufacture cleanly, simply and efficiently.

Hanovia UV+ cosmetics +toiletries

Hanovia UV+

medical +opthalmic

Don't give microorganisms a chance… kill them all, every time

When patients' health depends on you, you can depend on Hanovia UV. We've spent over eight decades working closely with medical device suppliers, ophthalmic manufacturers, hospitals and research centers. Meeting, and exceeding, their disinfection needs.

We integrate seamlessly and easily into your existing production lines. We disinfect the water you use everywhere in your process. And, unlike some technologies, we produce no nasty wastes. It's a simple indication of how useful, and effective, our UV systems actually are.

Sterile, safe, simple

If you'd like to provide sterility for your products, and purity for your process water, Hanovia UV is the right choice. No other technologies purify everything from raw materials through production lines to packaging - and that do it so very well.

- Ideal for instruments, devices, implants, aids, hollowware and more
- No residues, no taints, and completely safe for patients
- Unlike other technologies, kills all known microorganisms
- Has no negative impact on coatings, containers or packaging solutions
- Adaptable to a wide variety of production lines

spores, yeasts, moulds, algae...

...and protozoa, Hanovia UV gives them all a clean sweep

Why the best choose Hanovia - power with control

There are few water treatments that can both disinfect and decontaminate. And even fewer that are completely safe, and completely clean. Our UV technology does.

Our systems range from small scale to major industrial capacities. With a wide range of process connections, from flange to tri-clamp

Hanovia's UV systems are compatible with all process plant. And they're simple to install and easy to maintain. That's more reasons why the best companies choose Hanovia.

UV means better performance

With nutraceuticals, taste and quality are everything. Our systems have none of the drawbacks of other treatments, and they give you real advantages in the marketplace.

Unlike Chlorine residue, we leave no taint. We remove all spores, unlike filters. We're much more cost-effective than pasteurization. And we're even environmentally friendly, with no nasty by-products, and the option to recycle treated water. It's as beneficial for your brand as your quality control.

All in all, it's impressive technology. As it's from Hanovia, that's what you'd expect.

There's a Hanovia solution for every need

There's a technology that meets your needs at every stage of nutraceutical manufacture. And because it's from Hanovia, it's as reliable as it is safe.

- No taint, odour, taste or residue
- Suitable for a wide variety of food and drink
- Treat containers and bottle rinse water
- Treat storage tanks, water inflow and preparation areas
- Use throughout your process from incoming water to point-of-use
- Disinfected and decontaminated water means longer life from RO and other membranes
- Cost effective and safe
- Compatible with hot detergent
- Not affected by cleaning fluid
- Scalable, flexible and adaptable

no odours, colours or taints...

..the benefits of UV just keep on growing

Why does Hanovia UV lead the field?

UV was made for nutraceuticals. It's something we understand intimately, with years of research and development. It's an investment in the leading technology and people, and it makes a difference.

That's why we're an integral part of nutraceutical manufacturing systems for firms that demand the best. They understand that our insight and expertise contribute to their own success. More importantly, they know they can trust us to be a committed partner.

Hanovia UV+ nutraceuticals

Trusted by industry leaders around the World…

UV is at the heart of modern pharmaceutical and healthcare manufacturing processes. Hanovia is at the heart of UV. We make a difference to the world's leading brands because, simply put, we offer products and service that others only wish they could.

So, it's the smart decision to join the people who turn to Hanovia. Like GSK, L'Oréal, Astra Zeneca, Eli Lilly, Johnson & Johnson, Pfizer, Merck Sharpe & Dohme, Novartis, Colgate, and so many more the list is too long to print.

They're certain we give them the best, in every way. Whatever size firm you are, you can be, too.

…because we deliver satisfied customers

Better systems get the results you really need. And, it's good to know that better consumer experiences are at the heart of Hanovia UV.

- UV is totally safe chemical-free disinfection
- Purer products make clients happier
- Finer quality output lets you add real value
- Improved production leads to innovative new products
- With our low costs, you can open new price points
- Complete inactivation of microorganisms and impurities adds shelf life
- Dechlorination and de-ozonation mean longer life from you RO and other membranes

efficient, superior, simple, quality

with Hanovia UV

be sure with Hanovia UV…

…visit www.hanovia.com TODAY….

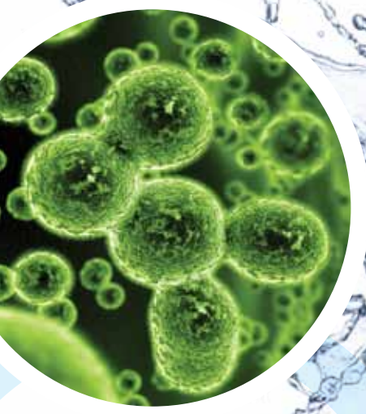

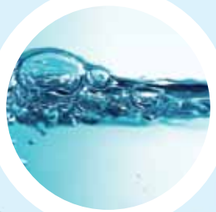

Performance Qualified Disinfection

PERFORMANCE QUALIFIED

- Disinfection performance Independently tested and validated.
- Complete peace of mind.
- Independently tested for CE compliance.
- Independently tested and materials approved to NSF61 for potable water.
- Independently tested materials and approved for UL compliance
- Factory calibrated, in field verifiable, absolute UV sensor.

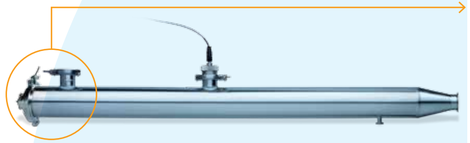

TOTAL TREATMENT CHAMBER

- Simple to replace UV lamps without draining chamber.
- Designed and manufactured with consideration to ASME BPE and cGMP requirements.
- High efficiency chamber design.

How PharmaLine PQ works

Engineering excellence for Pharma

SMART CONTROLS

- Continuous monitoring.
- Password protected control panel for security.
- Real-time data display with event logging.
- Continuous display of validated UV dose.
- Dose optimization.
- Modbus and Hard-Wired interface to SCADA systems.

HANOVIA UVLUX LAMP TECHNOLOGY

- Latest electronic ballast for extended lamp life.
- Latest generation high efficiency, long life amalgam lamp technology.

Hanovia

PHARMACEUTICALS

COSMETICS+TOILETRIES

MEDICAL+OPHTHALMIC

NUTRACEUTICALS

t: +44 (0) 1753 515 300 e: sales@hanovia.com
Hanovia Ltd, 780 Buckingham Avenue, Slough, Berkshire, SL1 4LA United Kingdom

Visit our website for further information at www.hanovia.com

910320-0001-01 brochure design by Breathe Marketing Limited www.breathe4u.com

Hanovia

the power in UV technology

The next level of Pharma disinfection – guaranteed by Hanovia

PharmaLine

Performance Qualified Disinfection

PharmaLine PQ - disinfection has evolved, and we can prove it

Designed by Hanovia - world leaders in UV technology - using the most advanced CFD computing. Tested to the limit. Validated and Performance Qualified - it's no wonder PharmaLine PQ is guaranteed to give you the ultimate process security.

This is Pharma process water disinfection taken to the next level: in fact, our most rigorously developed and tested products ever created for Pharma. And because PQ means 'Performance Qualified', you don't have to take our word for it.

We meet the standards that the best demand. Standards enforced/applied by external experts determined to ensure Pharma enjoys the most reliable, effective, complete disinfection. So, if they say you can rely on us, you really can be sure of total peace of mind.

Unique UV sensor with transmittance compensation

With Hanovia, rigorous quality comes as standard. But Hanovia has always believed in developing newer, better solutions. PharmaLine PQ is no exception.

The system provides accurate dose delivery, without the need for an external UV transmittance input. Performance qualified to deliver the disinfection security you need – guaranteed.

Patented Dry UV sensor housing

The factory-calibrated dry UV sensor is simply a cut above. It provides absolute UV intensity monitoring in real-time, and because it remains outside the water flow it can be removed and inspected without interrupting your processes. The patented design allows verification using a portable reference UV sensor with no risk of harmful UV exposure or need to wear safety equipment.

PharmaLine PQ from Hanovia

The ultimate disinfection barrier – proven to perform

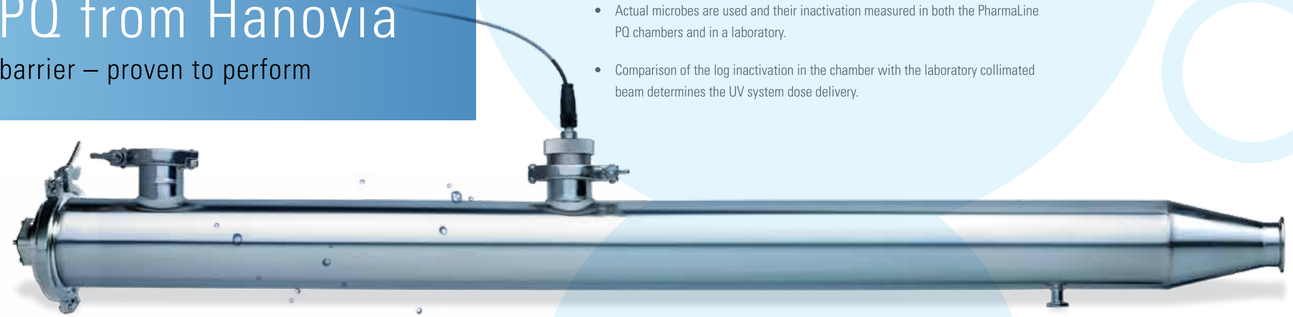

Performance Qualified by independent experts

In Pharma safety comes first. That's why PharmaLine PQ provides complete peace of mind.

- Hanovia Systems certificates and testing records.
- Material certificates for all wetted parts (FDA compliant materials).
- Company certificates.
- Statement from Carollo Engineers covering performance validation.
- Designed and manufactured with consideration to ASME BPE and cGMP requirements.
- Approved to international standards including UL, NSF61 and IEC.
- Certification of lamp output.

3rd Party Validation

Proven, complete disinfection - for every Pharma need

With a product as powerful as PharmaLine PQ, we don't expect you to take our word for it.

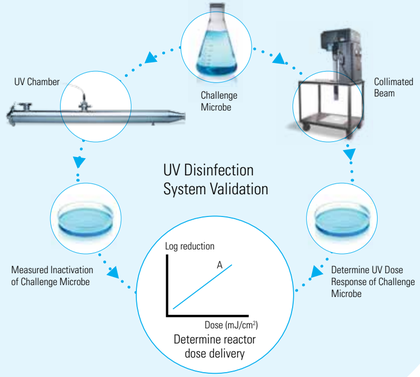

Guaranteed Disinfection Performance

Not only has the PLPQ been designed to the exacting industry standards using the latest design techniques to maximise performance, the disinfection performance has also been independently tested and validated by Carollo Engineers to the exacting 2006 USEPA protocol following the UV Disinfection Guidance Manual (UVDGM) guidelines.

- Actual microbes are used and their inactivation measured in both the PharmaLine PQ chambers and in a laboratory.
- Comparison of the log inactivation in the chamber with the laboratory collimated beam determines the UV system dose delivery.

Performance Qualified Disinfection

PharmaLine PQ certified by WQA to NSF/ANSI 61 for materials safety only, as verified and substantiated by test data

TESTED AND CERTIFIED WaterQuality UNDER INDUSTRY STANDARDS ®

The PharmaLine PQ display panel (UVtronic)

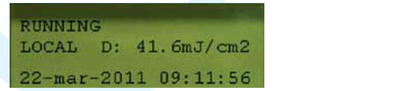

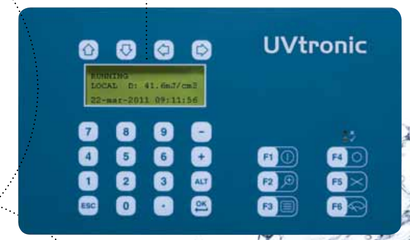

PharmaLine PQ Absolute monitoring and intelligent display

PharmaLine PQ precision dry UV sensor

Patented UV light protection shutter: the dry UV sensor can be removed without system shutdown for field verification. The automatic shutter protects operators from harmful UV exposure during removal of the UV sensor.

Hanovia

PHARMACEUTICALS

COSMETICS+TOILETRIES

MEDICAL+OPHTHALMIC

NUTRACEUTICALS

t: +44 (0) 1753 515 300 f: +44 (0) 1753 515301 e: sales@hanovia.com
Hanovia Ltd, 780 Buckingham Avenue, Slough, Berkshire, SL1 4LA United Kingdom

Visit our website for further information at www.hanovia.com Follow us on

910338-1101-01 ©2012 Hanovia Limited / brochure design by Breathe Marketing Limited www.breathe4u.com

Hanovia

PharmaLine DC

Chlorine reduction of pre-treatment process waters

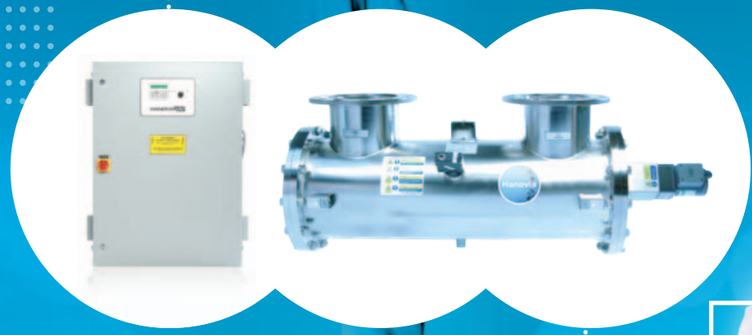

Technical Specification

UV Chamber	
Material:	StSt 316L / 1.4404
Internal finish:	As made pipe and tube, welds left as laid electropolished and passivated
External finish:	Sateen polish (120 grit) electropolished and passivated
Process (mating) connections:	Flange DN series PN16 rated
Drain connection:	BSPT
End plate:	Removable bolted plates
Degree of protection:	IP65 equivalent to NEMA 4 but not suitable for outside use
Arc tube (lamp):	Medium pressure / high purity quartz
Arc tube enclosure:	High purity quartz
Number of arc tubes (lamps):	1 to 16 depending on model
Expected lamp life:	4000-8000 hours
Temperature sensor:	Yes
UV monitor:	Wet UV monitor (down to minimum T10)
Working fluid temperature:	+5°C to +60°C
Maximum CIP temperature:	95°C with control cabinet electrically isolated
Hydrostatically pressure tested:	Yes to PED requirements EN13445
Operating / Design pressure:	6 bar / 7 bar
Pressure Loss:	Typically < 120 mbar
Seals:	EPDM FDA approved

Cabinet	
Material:	Polyester coated carbon steel
Degree of protection:	IP54 / NEMA 12
Supply voltages:	Up to 2.5kW 95V to 260V (nominal) 50/60Hz 3.5 to 7.0kW 190V to 500V (nominal) 50/60Hz >7.0kW 300V to 500V (nominal) 50/60Hz
Operating temperature range:	+5°C to +40°C
Relative humidity:	<90%
Cooling fans:	Yes
Interconnecting cable lengths:	10m
External interface:	4-20mA signal for UV intensity, Volt Free Contacts for Local/Remote, System Availble, Lamp Ready, System Warning, Common Alarm, Low UV Intensity, ELCB Trip

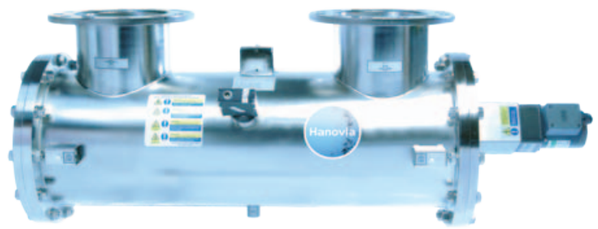

PharmaLine DC

Chlorine reduction of pre-treatment process waters

Product Specific Data

Features

Operational Features:

- Lamp on/off
- Remote start / stop
- Selectable auto restart following power failure
- Automatic wiper system electrical operation
- Event log

Screen Display Features:

- 2 line x 20 character VFD with indication of System Status
- Remote mode
- UV intensity in mW/cm^2 or relative intensity (%)
- Warning and trip messages
- Total hours run
- Spares listing
- English language

Alarm Message Features:

- Lamp fail
- Low UV intensity
- ELCB trip
- Wiper trip
- Power failure
- Chamber over temperature
- Power supply over temperature warning and trip

Safety Features:

- Door interlocked cabinet isolator
- Separate door locks
- Power supply thermal cut out
- Resettable circuit breaker
- Earth leakage trip
- Wiper motor overload cut out

Options

- Validation Support Pack
- Stainless Steel cabinet (316)
- Printed operating, menu and safety guides in Chinese, French and German
- Chamber internal finish 0.38µm welds ground out electropolished and passivated
- Automatic bleed valve
- ANSI 150 flanges and NPT drain and bleed stub
- Lead length 30m or 50m
- CIP maximum 130°C with control cabinet electrically isolated

Approvals

- CE following the low voltage and EMC directives conforming to EN50081-1, EN61000-4-2, 4-3, 4-5, 4-6, 4-8, and 4-11
- UL Listed E149108.

Dimensions (mm)

Chamber and cabinet:

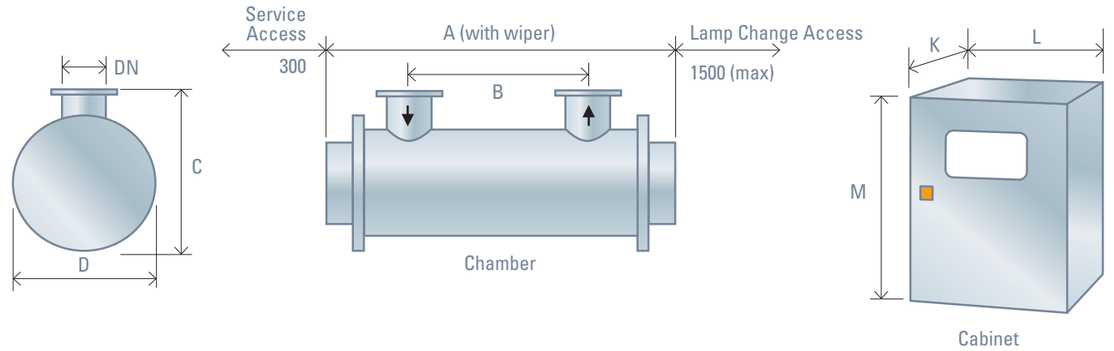

Flow m^3/hr	System for 90% reduction of chlorine	System for 99% reduction of chlorine
1	PharmaLine DC 0001	PharmaLine DC 0002
2	PharmaLine DC 0002	PharmaLine DC 0004
4	PharmaLine DC 0004	PharmaLine DC 0010
6	PharmaLine DC 0006	PharmaLine DC 0013
8	PharmaLine DC 0010	PharmaLine DC 0016
10	PharmaLine DC 0010	PharmaLine DC 0020
13	PharmaLine DC 0013	PharmaLine DC 0030
16	PharmaLine DC 0016	PharmaLine DC 0030
20	PharmaLine DC 0020	PharmaLine DC 0050
25	PharmaLine DC 0030	PharmaLine DC 0050
30	PharmaLine DC 0030	PharmaLine DC 0030 x 2

Model	Maximum Dechlorination Capacity * (m^3/hr)	Min. T_{10} (%)	Dimensions (mm) A	B	C	D	DN	K**	L**	M**	Approx Weight (Kg) Chamber (Empty)	Power Supply	Power (kW)
PharmaLine DC 0001	1	85	850	300	319	240	50	370	750	850	45	85	1.2
PharmaLine DC 0002	2	81	1300	710	319	240	50	370	750	850	50	85	3.5
PharmaLine DC 0004	4	90	1300	710	420	290	50	370	750	850	65	85	3.5
PharmaLine DC 0006	6	84	1300	710	420	290	50	370	900	1100	65	165	5.5
PharmaLine DC 0010	10	93	1300	710	505	410	50	370	900	1100	140	165	5.5
PharmaLine DC 0013	13	90	1300	710	505	410	50	370	900	1100	140	165	7.0
PharmaLine DC 0016	16	62	1300	710	420	290	50	380	1100	1590	70	290	14.0
PharmaLine DC 0020	20	62	1300	710	505	410	50	380	1100	1590	150	290	14.0
PharmaLine DC 0030	30	62	1300	710	505	410	80	380	2100	1590	150	480	21.0
PharmaLine DC 0050	50	76	1300	710	540	430	80	380	2300	1590	300	630	28.0

* The maximum dechlorination capacity is based on a 90% reduction of chlorine at T_{10} 95%

**Cabinet dimensions allow for door isolator, fan covers, bracket space and space for two cabinets to mount side by side on the K6 dimensions do not allow for cable entry which is from the side

A HALMA COMPANY

Certificate No: FM29365

Additional Information

All dimensions are approximate for clearance purposes only. Hanovia has a policy of continuous product development, exact drawings are available on request. All specifications are subject to change without notification. Your Distributor or Hanovia Account Manager can advise on correct dosage and specific requirements.

Hanovia

PHARMACEUTICALS

COSMETICS+TOILETRIES

MEDICAL+OPHTHALMIC

NUTRACEUTICALS

t: +44 (0) 1753 515 300 f: +44 (0) 1753 515301 e: sales@hanovia.com
Hanovia Ltd, 780 Buckingham Avenue, Slough, Berkshire, SL1 4LA United Kingdom

Visit our website for further information at www.hanovia.com | Follow us on

910338-1201-01 ©2012 Hanovia Limited / brochure design by Breathe Marketing Limited www.breathe4u.com

Hanovia

PharmaLine DL

Disinfection for process water loops

Technical Specification

UV Chamber

Material:	StSt 316L / 1.4404
Internal finish:	<0.38µm Ra max welds left as laid electropolished and passivated
External finish:	Sateen polish (120 grit) electropolished and passivated
Process (mating) connections:	Tri-clamp to BS 4825
Drain connection:	Tri-clamp to BS 4825
End plate:	Removable Tri-clamp
Degree of protection:	IP65 equivalent to NEMA 4 but not suitable for outside use
Arc tube (lamp):	Low pressure amalgam / high purity quartz
Arc tube enclosure:	High purity quartz
Number of arc tubes (lamps):	1
Expected lamp life:	12000-16000 hours
Temperature sensor:	No
UV monitor:	Wet UV monitor
Working fluid temperature:	+5°C to +40°C
Maximum CIP temperature:	95°C with lamp off
Hydrostatically pressure tested:	Yes to PED requirements EN13445
Operating / Design pressure:	6 bar / 7 bar
Pressure Loss:	Typically < 40 mbar
Seals:	EPDM FDA approved

Cabinet

Material:	Polyester coated carbon steel
Degree of protection:	IP65 / NEMA 4
Supply voltages:	230V (207V to 253V) or 115V (104V to 126V) 50/60Hz
Operating temperature range:	+5°C to +40°C
Relative humidity:	<90%
Cooling fans:	No
Interconecting cable lengths:	5m
External interface:	4-20mA signal for UV intensity %, Volt Free Contacts for Lamp ON, Low UV warning,

PharmaLine DL

Disinfection for process water loops

Product Specific Data

Features

Operational Features:

- Lamp on/off
- Remote start / stop
- Alarm reset button
- Low UV warning
- Horizontal or vertical mounting

Screen Display Features:

- 2 line x 16 character backlit LCD with indication of System Status
- Remote mode
- UV intensity %
- Warning and trip messages
- Total hours run
- English language

Alarm Message Features:

- Lamp fail
- Low UV % intensity
- Unit tripped

Safety Features:

- Door interlocked cabinet isolator
- Separate door lock
- Resettable circuit breaker
- Power on LED

Dimensions (mm)

Chamber:

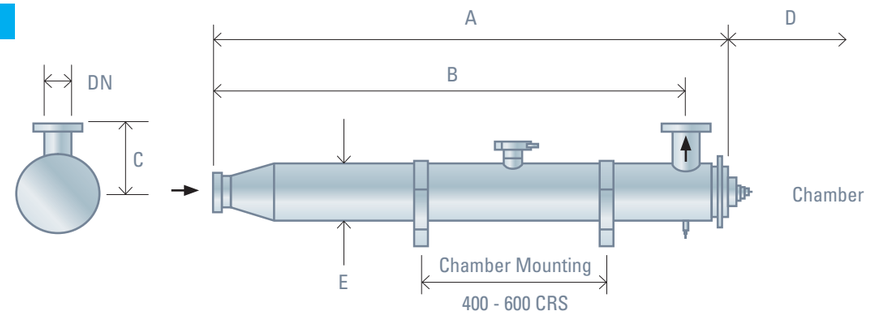

Cabinet:

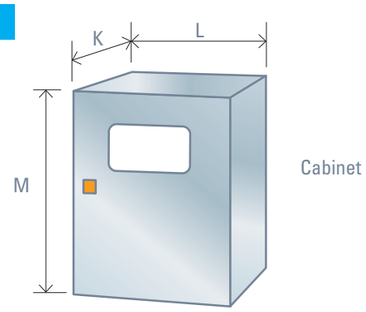

Options

- Validation Support Pack
- Stainless Steel cabinet (304)
- Printed operating, menu and safety guides available in Chinese, French and German
- Uvtronic control 230V (207 to 263V) CE and UL approved with pre calibrated DVGW compliant dry UV monitor
- CIP maximum 130°C with lamp off

Approvals

- CE following the low voltage and EMC directives conforming to EN61000-3-2, 3-3, 6-2 and 6-4 230V version only

Model	Maximum Disinfection Capacity * (m^3/hr)	Min. T_{10} (%)	Dimensions (mm)						230V			110V			Approx Weight (Kg)		
			A	B	C	D	E	DN	K**	L**	M**	K**	L**	M**	Chamber (Empty)	Power Supply	Power (W)
PharmaLine DL 0003	3.6	70	920	840	75	800	63	1"	225	300	550	275	400	750	5	18	80
PharmaLine DL 0008	8.1	70	1385	1273	82	1300	102	1.5"	225	300	550	275	400	750	9	18	80
PharmaLine DL 0014	14.1	70	1385	1273	82	1300	102	2"	225	300	550	275	400	750	9	18	140
PharmaLine DL 0023	23	70	1385	1273	82	1300	102	2"	225	300	550	275	400	750	9	18	270
PharmaLine DL 0056	56	70	1437	1300	150	1300	168	3"	225	300	550	275	400	750	20	18	270

* The maximum disinfection capacity is based on a dose of 26mJ/cm^2 RED MS2 phage T_{10} 98%

**Cabinet dimensions allow for door isolator, bottom cable entry and bracket space

Additional Information

All dimensions are approximate for clearance purposes only. Hanovia has a policy of continuous product development, exact drawings are available on request. All specifications are subject to change without notification. Your Distributor or Hanovia Account Manager can advise on correct dosage and specific requirements.

A HALMA COMPANY

Certificate No: FM29365

Hanovia

PHARMACEUTICALS

COSMETICS+TOILETRIES

MEDICAL+OPHTHALMIC

NUTRACEUTICALS

t: +44 (0) 1753 515 300 f: +44 (0) 1753 515301 e: sales@hanovia.com
Hanovia Ltd, 780 Buckingham Avenue, Slough, Berkshire, SL1 4LA United Kingdom

Visit our website for further information at www.hanovia.com | Follow us on

910338-1301-01 ©2012 Hanovia Limited / brochure design by Breathe Marketing Limited www.breathe4u.com

Hanovia

PharmaLine DO

Ozone reduction of process water loops

Technical Specification

UV Chamber

Material:	StSt 316L / 1.4404
Internal finish:	<0.38µm Ra max welds left as laid electropolished and passivated
External finish:	Sateen polish (120 grit) electropolished and passivated
Process (mating) connections:	Tri-clamp to BS 4825
Drain connection:	Tri-clamp to BS 4825
End plate:	Removable Tri-clamp
Degree of protection:	IP65 equivalent to NEMA 4 but not suitable for outside use
Arc tube (lamp):	Low pressure amalgam / high purity quartz
Arc tube enclosure:	High purity quartz
Number of arc tubes (lamps):	1
Expected lamp life:	12000-16000 hours
Temperature sensor:	On DO 0020 only
UV monitor:	Wet UV monitor
Working fluid temperature:	+5°C to +40°C
Maximum CIP temperature:	95°C with lamp off
Hydrostatically pressure tested:	Yes to PED requirements EN13445
Operating / Design pressure:	6 bar / 7 bar
Pressure Loss:	Typically < 5 mbar
Seals:	EPDM FDA approved

Cabinet

Material:	Polyester coated carbon steel
Degree of protection:	IP65 / NEMA 4 except DO 0020 which is IP55 / NEMA 12
Supply voltages:	230V (207V to 253V) or 115V (104V to 126V except DO 0020) 50/60Hz
Operating temperature range:	+5°C to +40°C
Relative humidity:	<90%
Cooling fans:	On DO 0020 only
Interconnecting cable lengths:	5m
External interface:	4-20mA signal for UV intensity %, Volt Free Contacts for Lamp ON, Low UV warning,

PharmaLine DO

Ozone reduction of process water loops

Product Specific Data

Features

Operational Features:

- Lamp on/off
- Remote start / stop
- Alarm reset button
- Low UV warning
- Horizontal mounting for all or vertical mounting except for DO 0020

Screen Display Features:

- 2 line x 16 character backlit LCD with indication of System Status
- Remote mode
- UV intensity %
- Warning and trip messages
- Total hours run
- English language

Alarm Message Features:

- Lamp fail
- Low UV % intensity
- Unit tripped

Safety Features:

- Door interlocked cabinet isolator
- Separate door lock
- Resettable circuit breaker
- Power on LED

Options

- Validation Support Pack
- Stainless Steel cabinet (304)
- Printed operating, menu and safety guides available in Chinese, French and German
- Uvtronic control 230V (207 to 263V) CE and UL approved with pre calibrated DVGW compliant dry UV monitor (intensity mode only)
- CIP maximum 130°C with lamp off

Approvals

- CE following the low voltage and EMC directives conforming to EN61000-3-2, 3-3, 6-2 and 6-4 230V version only

Dimensions (mm)

Chamber:

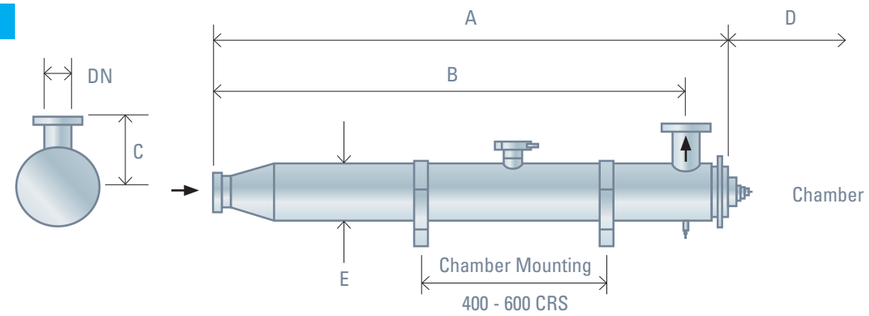

Cabinet:

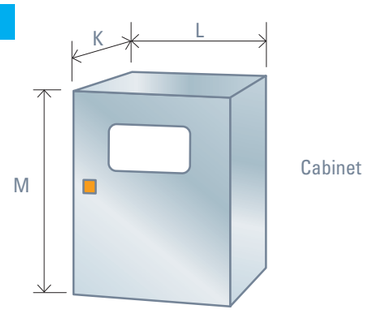

Model	Maximum Treatment Capacity * (m^3/hr)	Min. T_{10} (%)	Dimensions (mm)						230V			110V			Approx Weight (Kg)		
			A	B	C	D	E	DN	K**	L**	M**	K**	L**	M**	Chamber (Empty)	Power Supply	Power (W)
PharmaLine DO 0001	1.2	90	1385	1273	82	1300	102	1.5"	225	300	550	300	400	800	9	18	80
PharmaLine DO 0002	2.3	90	1385	1273	82	1300	102	2"	225	300	550	300	400	800	9	18	140
PharmaLine DO 0005	4.5	90	1385	1273	82	1300	102	2"	225	300	550	300	400	800	9	18	270
PharmaLine DO 0008	8.4	90	1437	1300	150	1300	168	3"	225	300	550	300	400	800	20	18	270
PharmaLine DO 0020	19.6	90	1985	1825	200	1900	206	3"	275	700	750	N/A	N/A	N/A	46	22	550

* The maximum deozonation capacity is based on a 90% reduction of ozone at T_{10} > 98%

**Cabinet dimensions allow for door isolator, bottom cable entry and bracket space

Additional Information

All dimensions are approximate for clearance purposes only. Hanovia has a policy of continuous product development, exact drawings are available on request. All specifications are subject to change without notification. Your Distributor or Hanovia Account Manager can advise on correct dosage and specific requirements.

A HALMA COMPANY

Certificate No: FM29365

Hanovia

PHARMACEUTICALS

COSMETICS+TOILETRIES

MEDICAL+OPHTHALMIC

NUTRACEUTICALS

t: +44 (0) 1753 515 300 f: +44 (0) 1753 515301 e: sales@hanovia.com
Hanovia Ltd, 780 Buckingham Avenue, Slough, Berkshire, SL1 4LA United Kingdom

Visit our website for further information at www.hanovia.com | Follow us on

910338-1401-01 ©2012 Hanovia Limited / brochure design by Breathe Marketing Limited www.breathe4u.com

Hanovia

PharmaLine DP

Disinfection for pre-treatment process waters

Technical Specification

UV Chamber

Material:	StSt 316L / 1.4404
Internal finish:	As made pipe and tube, welds left as laid electropolished and passivated
External finish:	Sateen polish (120 grit) electropolished and passivated
Process (mating) connections:	Flange DN series PN16 rated
Drain connection:	BSPT
End plate:	Removable Tri-clamp
Degree of protection:	IP65 equivalent to NEMA 4 but not suitable for outside use
Arc tube (lamp):	Low pressure amalgam / high purity quartz
Arc tube enclosure:	High purity quartz
Number of arc tubes (lamps):	1
Expected lamp life:	12000-16000 hours
Temperature sensor:	No
UV monitor:	Wet UV monitor
Working fluid temperature:	+5°C to +40°C
Maximum CIP temperature:	95°C with lamp off
Hydrostatically pressure tested:	Yes to PED requirements EN13445
Operating / Design pressure:	6 bar / 7 bar
Pressure Loss:	Typically < 40 mbar
Seals:	EPDM FDA approved

Cabinet

Material:	Polyester coated carbon steel
Degree of protection:	IP65 / NEMA 4
Supply voltages:	230V (207V to 253V) or 115V (104V to 126V) 50/60Hz
Operating temperature range:	+5°C to +40°C
Relative humidity:	<90%
Cooling fans:	No
Interconnecting cable lengths:	5m
External interface:	4-20mA signal for UV intensity %, Volt Free Contacts for Lamp ON, Low UV warning,

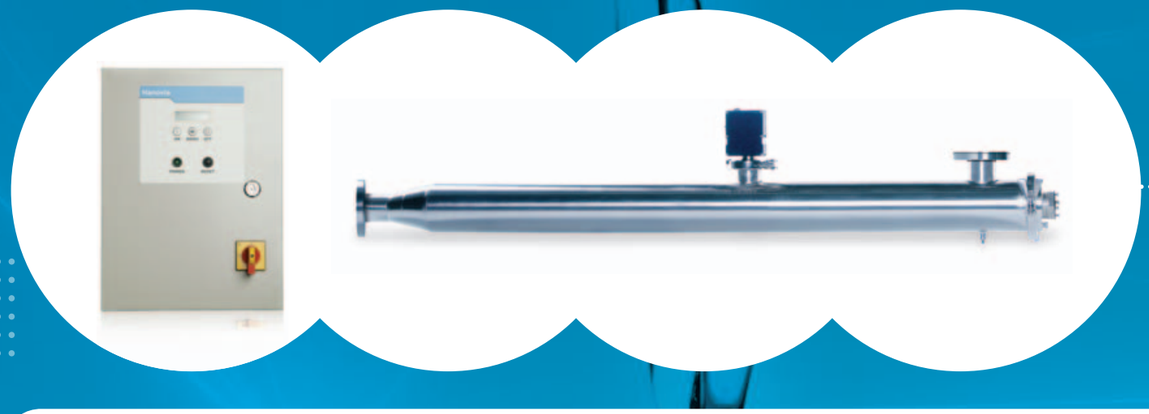

PharmaLine DP

Disinfection for pre-treatment process waters

Product Specific Data

Features

Operational Features:

- Lamp on/off
- Remote start / stop
- Alarm reset button
- Low UV warning
- Horizontal or vertical mounting

Screen Display Features:

- 2 line x 16 character backlit LCD with indication of System Status
- Remote mode
- UV intensity %
- Warning and trip messages
- Total hours run
- English language.

Alarm Message Features:

- Lamp fail
- Low UV % intensity
- Unit tripped

Safety Features:

- Door interlocked cabinet isolator
- Separate door lock
- Resettable circuit breaker
- Power on LED

Options

- Validation Support Pack
- Stainless Steel cabinet (304)
- Printed operating, menu and safety guides available in Chinese, French and German
- Uvtronic control 230V (207 to 263V) CE and UL approved with pre calibrated DVGW compliant dry UV monitor
- Chamber internal finish 0.38µm welds as laid electropolished and passivated
- Auto-wiper with status LED's (except DL 0003) pneumatic operation
- ANSI 150 flanges and NPT drain
- CIP maximum 130°C with cabinet electrically isolated

Approvals

- CE following the low voltage and EMC directives conforming to EN61000-3-2, 3-3, 6-2 and 6-4 230V version only

Dimensions (mm)

Chamber:

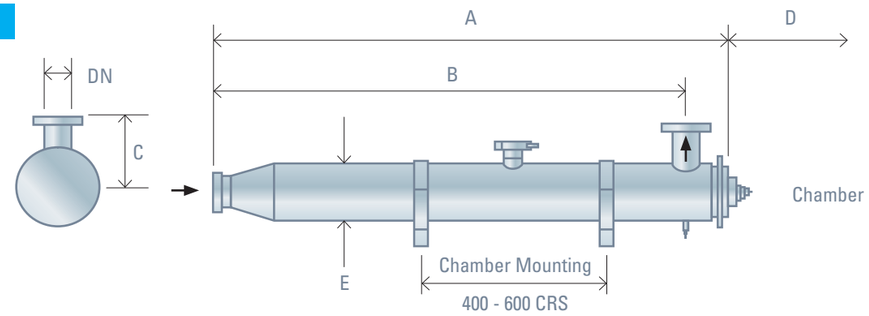

Cabinet:

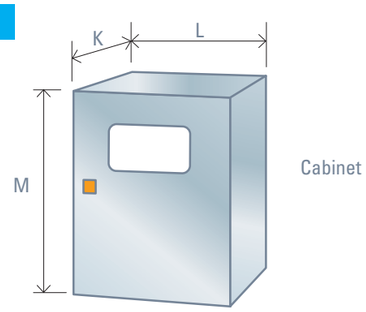

Model	Maximum Disinfection Capacity * (m^3/hr)	Min. T_{10} (%)	Dimensions (mm)						230V			110V			Approx Weight (Kg)		
			A	B	C	D	E	DN	K**	L**	M**	K**	L**	M**	Chamber (Empty)	Power Supply	Power (W)
PharmaLine DP 0003***	3.5	70	920	840	100	800	63	25	225	300	550	275	400	750	5	18	80
PharmaLine DP 0007	7.3	70	1385	1273	150	1300	102	40	225	300	550	275	400	750	9	18	80
PharmaLine DP 0013	12.7	70	1385	1273	150	1300	102	50	225	300	550	275	400	750	9	18	140
PharmaLine DP 0023	23	70	1385	1273	150	1300	102	50	225	300	550	275	400	750	9	18	270
PharmaLine DP 0047	46.8	70	1437	1300	200	1300	168	80	225	300	550	275	400	750	25	18	270

* The maximum disinfection capacity is based on a dose of 26mJ/cm^2 RED MS2 phage T_{10} 95%

**Cabinet dimensions allow for door isolator, bottom cable entry and bracket space

*** No wiper option

Additional Information

All dimensions are approximate for clearance purposes only. Hanovia has a policy of continuous product development, exact drawings are available on request. All specifications are subject to change without notification. Your Distributor or Hanovia Account Manager can advise on correct dosage and specific requirements.

A HALMA COMPANY

Certificate No: FM29365

Hanovia

PHARMACEUTICALS

COSMETICS+TOILETRIES

MEDICAL+OPHTHALMIC

NUTRACEUTICALS

t: +44 (0) 1753 515 300 f: +44 (0) 1753 515301 e: sales@hanovia.com
Hanovia Ltd, 780 Buckingham Avenue, Slough, Berkshire, SL1 4LA United Kingdom

Visit our website for further information at www.hanovia.com | Follow us on

910338-1501-01 ©2012 Hanovia Limited / brochure design by Breathe Marketing Limited www.breathe4u.com

Hanovia

PharmaLine DT

TOC reduction of purified water

Technical Specification

UV Chamber

Material:	StSt 316L / 1.4404
Internal finish:	<0.38µm Ra max welds left as laid electropolished and passivated
External finish:	Sateen polish (120 grit) electropolished and passivated
Process (mating) connections:	Tri-clamp to BS 4825
Drain connection:	Tri-clamp to BS 4825
End plate:	Removable Tri-clamp
Degree of protection:	IP65 equivalent to NEMA 4 but not for outside use
Arc tube (lamp):	Low pressure amalgam / synthetic quartz
Arc tube enclosure:	Synthetic quartz
Number of arc tubes (lamps):	1
Expected lamp life:	12000-16000 hours
Temperature sensor:	No
UV monitor:	Wet UV monitor
Working fluid temperature:	+5°C to +40°C
Maximum CIP temperature:	95°C with lamp off
Hydrostatically pressure tested:	Yes to PED requirements EN13445
Operating / Design pressure:	6 bar / 7 bar
Pressure Loss:	Typically < 5 mbar
Seals:	EPDM FDA approved

Cabinet

Material:	Polyester coated carbon steel
Degree of protection:	IP65 / NEMA 4
Supply voltages:	230V (207V to 253V) or 115V (104V to 126V) 50/60Hz
Operating temperature range:	+5°C to +40°C
Relative humidity:	<90%
Cooling fans:	No
Interconnecting cable lengths:	5m
External interface:	4-20mA signal for UV intensity %, Volt Free Contacts for Lamp ON, Low UV warning

PharmaLine DT

TOC reduction of purified water

Product Specific Data

Features

Operational Features:

- Lamp on/off
- Remote start / stop
- Alarm reset button
- Low UV warning
- Horizontal or vertical mounting

Screen Display Features:

- 2 line x 16 character backlit LCD with indication of System Status
- Remote mode
- UV intensity %
- Warning and trip messages
- Total hours run
- English language

Alarm Message Features:

- Lamp fail
- Low UV % intensity
- Unit tripped

Safety Features:

- Door interlocked cabinet isolator
- Separate door lock
- Resettable circuit breaker
- Power ON LED

Options

- Validation Support Pack
- Stainless Steel cabinet (304)
- Printed operating, menu and safety guides in Chinese, French and German
- Uvtronic control 230V (207 to 263V) CE and UL approved with pre calibrated DVGW compliant dry UV monitor (intensity mode only)
- CIP maximum 130°C with lamp off

Approvals

- CE following the low voltage and EMC directives conforming to EN61000-3-2, 3-3, 6-2 and 6-4 230V version only

Dimensions (mm)

Chamber:

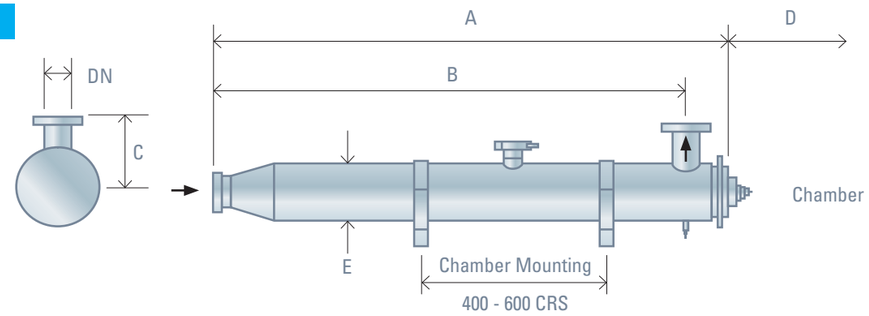

Cabinet:

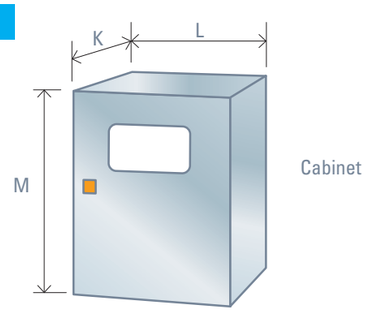

A HALMA COMPANY

Certificate No: FM29365

Additional Information
All dimensions are approximate for clearance purposes only. Hanovia has a policy of continuous product development, exact drawings are available on request. All specifications are subject to change without notification. Your Distributor or Hanovia Account Manager can advise on correct dosage and specific requirements.

Flow m^3/hr	System for 90mJ/cm^2 average dose	System for 180mJ/cm^2 average dose	System for 300mJ/cm^2 average dose
2	PharmaLine DT 0002	PharmaLine DT 0004	PharmaLine DT 0008
4	PharmaLine DT 0004	PharmaLine DT 0008	PharmaLine DT 0016
5	PharmaLine DT 0008	PharmaLine DT 0016	PharmaLine DT 0016
8	PharmaLine DT 0008	PharmaLine DT 0016	PharmaLine DT 0016 x 2
10	PharmaLine DT 0016	PharmaLine DT 0016 x 2	PharmaLine DT 0016 x 2
15	PharmaLine DT 0016	PharmaLine DT 0016 x 2	PharmaLine DT 0016 x 3
25	PharmaLine DT 0016 x 2	PharmaLine DT 0016 x 3	

Model	Maximum Treatment Capacity * (m^3/hr)	Min. T_{10} (%)	Dimensions (mm)						230V			110V			Approx Weight (Kg)		
			A	B	C	D	E	DN	K**	L**	M**	K**	L**	M**	Chamber (Empty)	Power Supply	Power (W)
PharmaLine DT 0002	2.5	90	1385	1273	82	1300	102	1.5"	225	300	550	275	400	750	9	18	80
PharmaLine DT 0004	4.5	90	1385	1273	82	1300	102	2"	225	300	550	275	400	750	9	18	140
PharmaLine DT 0008	8.7	90	1385	1273	82	1300	102	2"	225	300	550	275	400	750	9	18	270
PharmaLine DT 0016	16.8	90	1437	1300	150	1300	168	3"	225	300	550	275	400	750	20	18	270

* The maximum TOC reduction capacity is based on a 90mJ/cm^2 average dose at T_{10}> 98%

**Cabinet dimensions allow for door isolator, bottom cable entry and bracket space

Hanovia

PHARMACEUTICALS

COSMETICS+TOILETRIES

MEDICAL+OPHTHALMIC

NUTRACEUTICALS

t: +44 (0) 1753 515 300 f: +44 (0) 1753 515301 e: sales@hanovia.com
Hanovia Ltd, 780 Buckingham Avenue, Slough, Berkshire, SL1 4LA United Kingdom

Visit our website for further information at www.hanovia.com | Follow us on

910338-1601-01 ©2012 Hanovia Limited / brochure design by Breathe Marketing Limited www.breathe4u.com

Hanovia

PharmaLine PQL

Performance qualified disinfection for process water loops

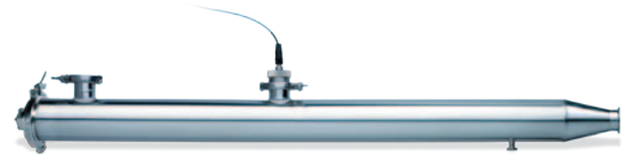

Technical Specification

UV Chamber

Material:	StSt 316L / 1.4404
Internal finish:	<0.38µm Ra max welds left as laid electropolished and passivated
External finish:	Sateen polish (120 grit) electropolished and passivated
Process (mating) connections:	Tri-clamp to BS 4825
Drain connection:	Tri-clamp to BS 4825
End plate:	Removable Tri-clamp
Degree of protection:	IP65 equivalent to NEMA 4 but not suitable for outside use
Arc tube (lamp):	Low pressure amalgam / high purity quartz
Arc tube enclosure:	High purity quartz
Number of arc tubes (lamps):	1
Expected lamp life:	12000-16000 hours
Temperature sensor:	No
UV monitor:	Pre calibrated DVGW compliant dry UV monitor.
Working fluid temperature:	+5°C to +40°C
Maximum CIP temperature:	95°C with lamp off
Hydrostatically pressure tested:	Yes to PED requirements EN13445
Operating / Design pressure:	6 bar / 7 bar
Pressure Loss:	Typically < 20 mbar
Seals:	EPDM FDA approved WQA certified to NSF 61 except PQL 0005

Cabinet

Material:	Polyester coated carbon steel
Degree of protection:	IP66 / NEMA 4
Supply voltages:	230V (207V to 263V) 50/60Hz
Operating temperature range:	+5°C to +40°C
Relative humidity:	<90%
Cooling fans:	No
Interconnecting cable lengths:	10m
External interface:	4-20mA signals for UV dose and UV intensity, 24V dc 10mA max for trip, warning, system available, system remote, lamp running, replace lamp and Modbus for complete remote control

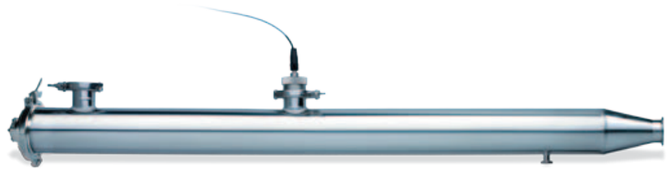

PharmaLine PQL

Performance qualified disinfection for process water loops

Product Specific Data

Features

Operational Features:

- Lamp on/off
- Remote/local operation
- Validated dose calculation from fixed or variable flow with or without UVT input
- Option of running with dose algorithm which automatically compensates for changes in UV transmittance
- Selectable auto restart following power failure
- Event log (2000)
- 3 level operating menu
- Pre calibrated DVGW compliant dry UV monitor
- Dry monitor port with light trap

Screen Display Features:

- 4 line x 20 character backlit LCD with indication of System Status
- Remote / local mode
- Dose or intensity
- Alarms and warnings list
- Date and time
- English language

Alarm Message Features:

- Lamp fail
- Low UV dose or intensity
- Operation outside validated conditions

Safety Features:

- Door interlocked cabinet isolator
- Separate door locks
- Ballast thermal cut out
- Resettable circuit breakers
- UV monitor port shutters (light trap)

Options

- Validation Support Pack
- Stainless Steel cabinet (304)
- 30m lead lengths
- Printed operating, menu and safety guides available in Chinese, French and German
- CIP maximum 130°C with lamp off
- In field UV reference monitor and intensity meter

Approvals

- UL 61010-1 and IEC 61010-1
- CE following the low voltage and EMC directives conforming to EN61000-3-2, 3-3, 4-2, 4-3, 4-4, 4-5, 4-6, 4-8 and 4-11 and 61326-1 class A
- Carollo certified to USEPA / UVDGM (2006)
- UV monior is DVGW W294-3 approved
- All wetted materials WQA certified to NSF 61 except PQL 0005

Additional Information
All dimensions are approximate for clearance purposes only. Hanovia has a policy of continuous product development, exact drawings are available on request. All specifications are subject to change without notification. Your Distributor or Hanovia Account Manager can advise on correct dosage and specific requirements.

A HALMA COMPANY

Certificate No: FM29365

Dimensions (mm)

Chamber:

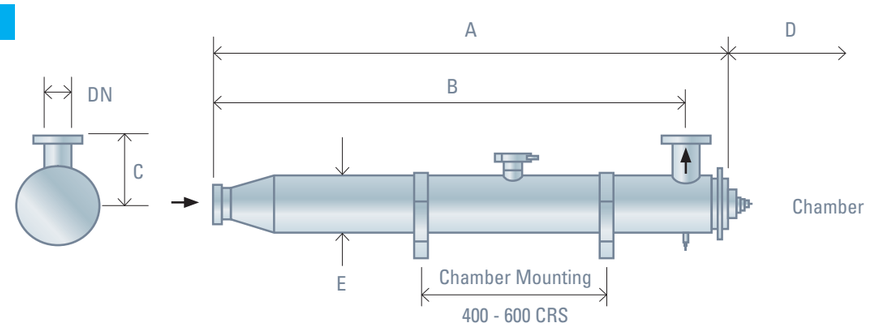

Cabinet:

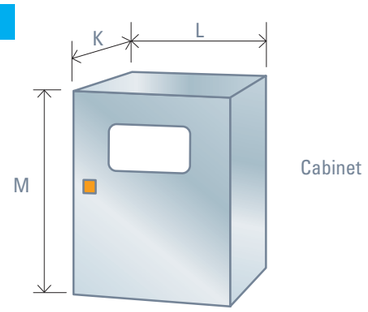

Model	Maximum Disinfection Capacity * (m^3/hr)	Min. T_{10} (%)	Dimensions (mm) A	B	C	D	E	DN	K**	L**	M**	Approx Weight (Kg) Chamber (Empty)	Power Supply	Power (W)
PharmaLine PQL 0005	5.3	60	1385	1273	82	1300	102	1.5"	260	600	950	9	37	80
PharmaLine PQL 0009	8.2	60	1385	1273	82	1300	102	2"	260	600	950	9	37	140
PharmaLine PQL 0016	16	60	1385	1273	82	1300	102	2"	260	600	950	9	37	270
PharmaLine PQL 0036	36	60	1437	1300	150	1300	168	3"	260	600	950	20	37	270

* The maximum disinfection capacity is based on a dose of 32mJ/cm^2 RED MS2 phage T_{10} 98% Fouling Factor 0.95 and 'End of Lamp Life' EOLL 0.9

**Cabinet dimensions allow for door isolator, bottom cable entry and bracket space. For cooling add 300mm to L and 150mm to M dimensions

Hanovia

PHARMACEUTICALS

COSMETICS+TOILETRIES

MEDICAL+OPHTHALMIC

NUTRACEUTICALS

t: +44 (0) 1753 515 300 f: +44 (0) 1753 515301 e: sales@hanovia.com
Hanovia Ltd, 780 Buckingham Avenue, Slough, Berkshire, SL1 4LA United Kingdom

Visit our website for further information at www.hanovia.com | Follow us on

910338-1701-01 ©2012 Hanovia Limited / brochure design by Breathe Marketing Limited www.breathe4u.com

Hanovia

PharmaLine PQP

Performance qualified disinfection
for pre-treatment process waters

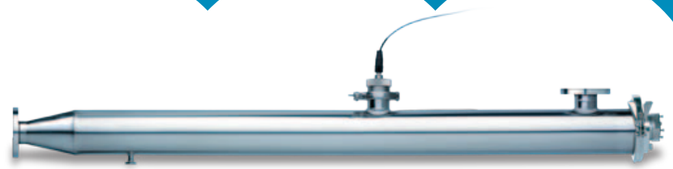

Technical Specification

UV Chamber	
Material:	StSt 316L / 1.4404
Internal finish:	As made pipe and tube, welds left as laid electropolished and passivated
External finish:	Sateen polish (120 grit) electropolished and passivated
Process (mating) connections:	Flange DN series PN16 rated
Drain connection:	BSPT
End plate:	Removable Tri-clamp
Degree of protection:	IP65 equivalent to NEMA 4 but not suitable for outside use
Arc tube (lamp):	Low pressure amalgam / high purity quartz
Arc tube enclosure:	High purity quartz
Number of arc tubes (lamps):	1
Expected lamp life:	12000-16000 hours
Temperature sensor:	No
UV monitor:	Pre calibrated DVGW compliant dry UV monitor.
Working fluid temperature:	+5°C to +40°C
Maximum CIP temperature:	95°C with lamp off
Hydrostatically pressure tested:	Yes to PED requirements EN13445
Operating / Design pressure:	6 bar / 7 bar
Pressure Loss:	Typically < 20 mbar
Seals:	EPDM FDA approved WQA certified to NSF 61 except PQP 0005

Cabinet	
Material:	Polyester coated carbon steel
Degree of protection:	IP66 / NEMA 4
Supply voltages:	230V (207V to 263V) 50/60Hz
Operating temperature range:	+5°C to +40°C
Relative humidity:	<90%
Cooling fans:	No
Interconnecting cable lengths supplied:	10m
External interface:	4-20mA signals for UV dose and UV intensity, 24V dc 10mA max for trip, warning, system available, system remote, lamp running, replace lamp and Modbus for complete remote control

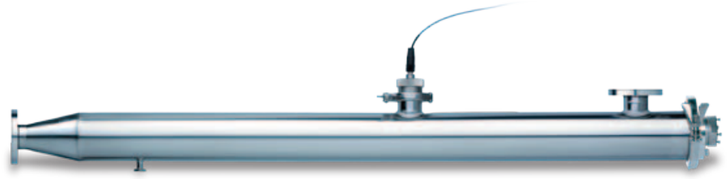

PharmaLine PQP

Performance qualified disinfection for pre-treatment process waters

Product Specific Data

Features

Operational Features:

- Lamp on/off
- Remote/local operation
- Validated dose calculation from fixed or variable flow with or without UVT input
- Option of running with dose algorithm which automatically compensates for changes in UV transmittance
- Selectable auto restart following power failure
- Event log (2000)
- 3 level operating menu
- Pre calibrated DVGW compliant dry UV monitor
- Dry monitor port with light trap

Screen Display Features:

- 4 line x 20 character backlit LCD with indication of System Status
- Remote / local mode
- Dose or intensity
- Alarms and warnings list
- Date and time
- English language

Alarm Message Features:

- Lamp fail
- Low UV dose or intensity
- Operation outside validated conditions

Safety Features:

- Door interlocked cabinet isolator
- Separate door locks
- Ballast thermal cut out
- Resettable circuit breakers
- UV monitor port shutters (light trap)

Options

- Validation Support Pack
- Stainless Steel cabinet (304)
- 30m lead lengths
- Printed operating, menu and safety guides in Chinese, French and German
- Auto-wiper pneumatic operation
- ANSI 150 flanges and NPT drain
- Chamber internal finish 0.38µm welds as laid electropolished and passivated
- CIP maximum 130°C with lamp off
- In field reference monitor and intensity meter

Approvals

- UL 61010-1 and IEC 61010-1
- CE following the low voltage and EMC directives conforming to EN61000-3-2, 3-3, 4-2, 4-3, 4-4, 4-5, 4-6, 4-8 and 4-11 and 61326-1 class A
- Carollo certified to USEPA / UVDGM (2006)
- UV monior is DVGW W294-3 approved
- All wetted materials WQA certified to NSF 61 except PQP 0005

Dimensions (mm)

Chamber:

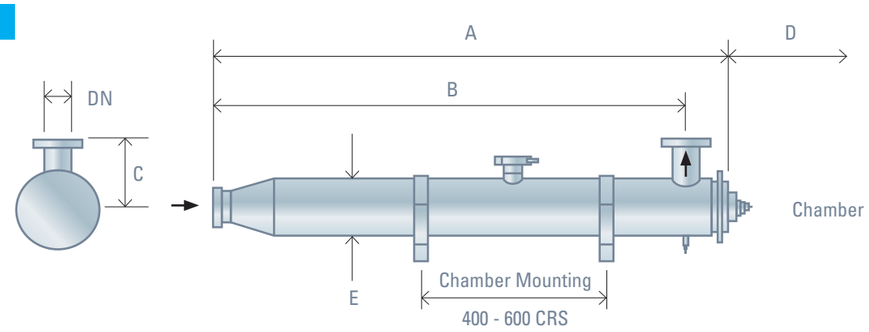

Cabinet:

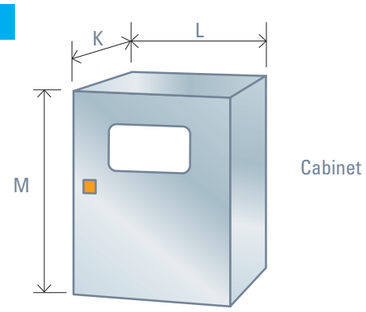

Model	Maximum Disinfection Capacity * (m^3/hr)	Min. T_{10} (%)	Dimensions (mm) A	B	C	D	E	DN	K**	L**	M**	Approx Weight (Kg) Chamber (Empty)	Power Supply	Power (W)
PharmaLine PQP 0005	5.1	60	1385	1273	150	1300	102	40	260	600	950	9	37	80
PharmaLine PQP 0008	8.1	60	1385	1273	150	1300	102	50	260	600	950	9	37	140
PharmaLine PQL 0016	16	60	1385	1273	150	1300	102	50	260	600	950	9	37	270
PharmaLine PQP 0030	32	60	1437	1300	200	1300	168	80	260	600	950	25	37	270

* The maximum disinfection capacity is based on a dose of 32mJ/cm^2 RED MS2 phage T_{10} 95% Fouling Factor 0.95 and 'End of lamp life' (EOLL) 0.9

**Cabinet dimensions allow for door isolator, bottom cable entry and bracket space. For cooling add 300mm to L and 150mm to M dimensions

Additional Information
All dimensions are approximate for clearance purposes only. Hanovia has a policy of continuous product development, exact drawings are available on request. All specifications are subject to change without notification. Your Distributor or Hanovia Account Manager can advise on correct dosage and specific requirements.

A HALMA COMPANY

Certificate No: FM29365

Performance Qualified Disinfection

PERFORMANCE QUALIFIED

- Disinfection performance Independently tested and validated.
- Complete peace of mind.
- Independently tested for CE compliance.
- Independently tested and wetted materials approved to NSF61 for potable water.
- Most units approved to UL
- Factory calibrated, in field verifiable, absolute UV sensor.

TOTAL TREATMENT CHAMBER

- Simple to replace UV lamps without draining chamber.
- Chamber materials Certified by WQA to NSF/ANSF 61 for potable water.
- High efficiency chamber design.
- Optional auto wiper.

How PureLine PQ works

the disinfection solution for high purity applications

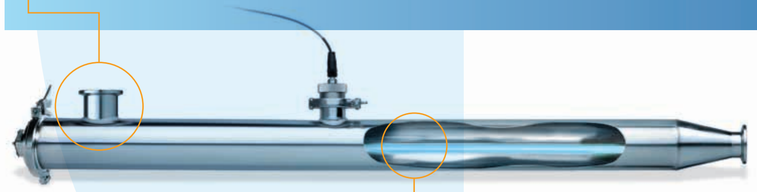

SMART CONTROLS

- Continuous UV monitoring.
- Password protected control panel for security.
- Real-time data display with event logging.
- Continuous display of validated UV dose.
- Dose optimization.
- Modbus and Hard-Wired interface to SCADA systems.
- Dose control (Optional on some models)

HANOVIA UVLUX LAMP TECHNOLOGY

- Latest electronic ballast for extended lamp life. *
- Latest generation high efficiency, long life amalgam lamp technology. *
- MP lamps available on selected models. *

*Available on selected models

Hanovia

Eight decades of continuous development has put Hanovia at the forefront of UV science and technology.

Working with the biggest names in food, beverage, electronics, pharmaceutical, aquaculture, pools and leisure, and many other industries, we have gained valuable insights into our customers' requirements and this enables us to offer you not only the finest UV systems, but a full UV solution for your industrial or leisure water treatment problems – all backed by first class technical and service support, available wherever you are around the World.

BREWING

FOOD+DAIRY

BOTTLED WATER+SOFT DRINKS

t: +44 (0) 1753 515 300 f: +44 (0) 1753 515301 e: sales@hanovia.com
Hanovia Ltd, 780 Buckingham Avenue, Slough, Berkshire, SL1 4LA United Kingdom
Visit our website for further information at www.hanovia.com

910337-2101-01 ©2012 Hanovia Limited / brochure design by Breathe Marketing Limited www.breathe4u.com

Hanovia the power in UV technology

Meeting stringent water quality standards for Food & Beverage - guaranteed by Hanovia

PureLine Performance Qualified Disinfection

PureLine PQ - disinfection has evolved, and we can prove it

Designed by Hanovia - world leaders in UV technology - using the most advanced CFD computing. Tested to the limit. Validated and Performance Qualified - it's no wonder PureLine PQ is guaranteed to give you the ultimate process security.

This is Food & Beverage process water disinfection taken to the next level: in fact, our most rigorously developed and tested products ever created for Food & Beverage. And because PQ means 'Performance Qualified', you don't have to take our word for it.

We meet the standards that the best demand. Standards enforced/applied by external experts determined to ensure Food & Beverage enjoys the most reliable, effective, complete disinfection. So, if they say you can rely on us, you really can be sure of total peace of mind.

High Quality design and build

Chamber seals designed to withstand Food & Beverage CIP procedures including use of specified chemicals and hot water up to 95 degrees Celsius.

*Unique UV sensor with transmittance compensation

With Hanovia, rigorous quality comes as standard. But Hanovia has always believed in developing newer, better solutions. PureLine PQ is no exception.

The system provides accurate dose delivery, without the need for an external UV transmittance input. Performance qualified to deliver the disinfection security you need – guaranteed.

*Available on selected models

*Dry UV sensor housing

The factory-calibrated dry UV sensor is simply a cut above. It provides absolute UV intensity monitoring in real-time, and because it remains outside the water flow it can be removed and inspected without interrupting your processes. The patented design allows verification using a portable reference UV sensor with no risk of harmful UV exposure or need to wear safety equipment.

*Available on selected models

PureLine PQ from Hanovia

pure, simple and non-chemical, disinfection

Performance Qualified by independent experts

In Food & Beverage safety comes first. That's why PureLine PQ provides complete peace of mind.

- Hanovia Systems certificates and testing records.
- Material certificates for all wetted parts (FDA compliant materials). *
- Company certificates.
- Statement from Carollo Engineers covering performance validation.
- Approved to international standards including UL, NSF61 and IEC. *
- Certification of lamp output.

*Available on selected models

PureLine PQ certified by WQA to NSF/ANSI 61 for materials safety as verified and substantiated by test data

Performance Qualified Disinfection

3rd Party Validation

Proven, complete disinfection - for every Food & Beverage need

With a product as powerful as PureLine PQ, we don't expect you to take our word for it.

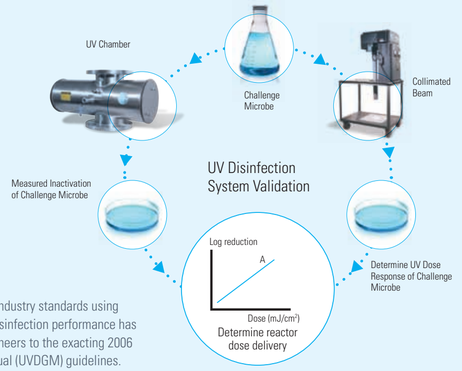

Guaranteed Disinfection Performance

Not only has the PureLine PQ been designed to the exacting industry standards using the latest design techniques to maximise performance, the disinfection performance has also been independently tested and validated by Carollo Engineers to the exacting 2006 USEPA protocol following the UV Disinfection Guidance Manual (UVDGM) guidelines.

- Actual microbes are used and their inactivation measured in both the PureLine PQ chambers and in a laboratory.
- Comparison of the log inactivation in the chamber with the laboratory collimated beam determines the UV system dose delivery.

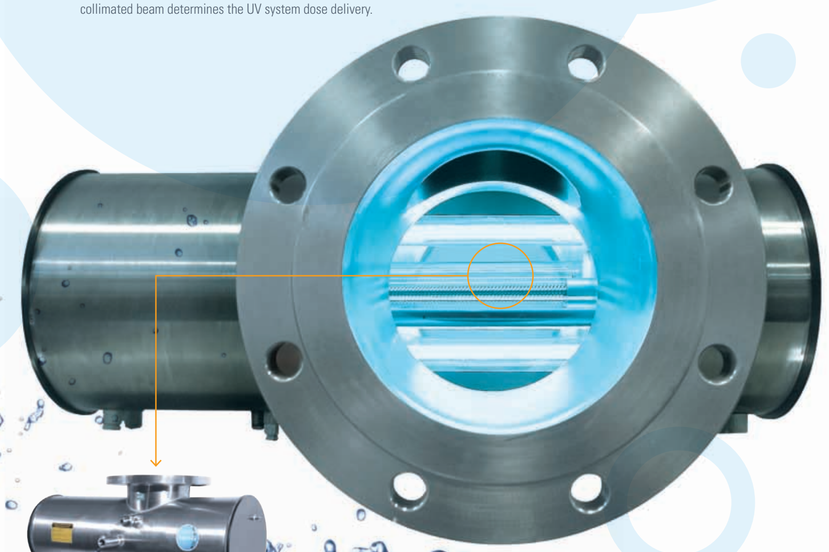

The PureLine PQ display panel (UVtronic)

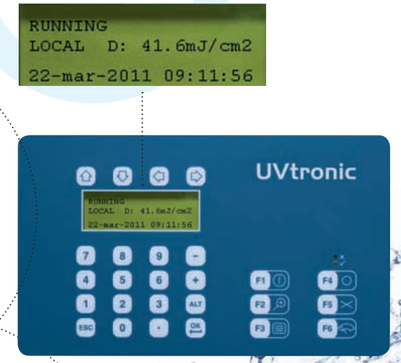

PureLine PQ Environmentally friendly disinfection without compromise of product quality

PureLine PQ precision dry UV sensor

Patented UV light protection shutter:* the dry UV sensor can be removed without system shutdown for field verification. The automatic shutter protects operators from harmful UV exposure during removal of the UV sensor.

* Available on some models

PureLine D

PureLine D 0083 - D 0850

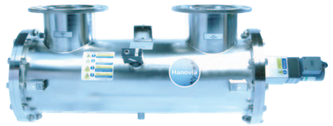

Technical Specification

UV Chamber	
Material:	StSt 316L / 1.4404
Internal finish:	As made pipe and tube, welds left as laid electropolished and passivated
External finish:	Sateen polish (120 grit) electropolished and passivated
Process (mating) connections:	Flange DN series PN16 rated
Drain connection:	BSPT
End plate:	Removable bolted plates
Degree of protection:	IP65 equivalent to NEMA 4 but not suitable for outside use
Arc tube (lamp):	Medium pressure / high purity quartz
Arc tube enclosure:	High purity quartz
Number of lamps:	1 to 4
Expected lamp life:	4000-8000 hours
Temperature sensor:	Yes
UV monitor:	Wet UV monitor (down to minimum T_{10})
Working fluid temperature:	+5°C to +60°C
Maximum CIP temperature:	95°C with control cabinet electrically isolated
Hydrostatically pressure tested:	Yes to PED requirements EN13445
Operating / Design pressure:	6 bar / 7 bar
Pressure Loss:	Typically < 150 mbar
Seals:	EPDM FDA approved

Cabinet	
Material:	Polyester coated carbon steel
Degree of protection:	IP54 equivalent to NEMA 12
Supply voltages:	Up to 2.5kW 95 to 260V (nominal) 50/60Hz 3.5 to 7.0kW 190V to 500V (nominal) 50/60Hz >7.0kW 300V to 500V (nominal) 50/60Hz
Operating temperature range:	+5°C to +40°C
Relative humidity:	<90%
Cooling fans:	Yes
cable length:	10m
External contacts:	4-20mA signal for UV intensity, Volt Free Contacts for Local/Remote, System Available, Lamp Ready, System Warning, Common Alarm, Low UV Intensity, ELCB Trip

Hanovia

Eight decades of continuous development has put Hanovia at the forefront of UV science and technology.

Working with the biggest names in food, beverage, electronics, pharmaceutical, aquaculture, pools and leisure, and many other industries, we have gained valuable insights into our customers' requirements and this enables us to offer you not only the finest UV systems, but a full UV solution for your industrial or leisure water treatment problems – all backed by first class technical and service support, available wherever you are around the World.

BREWING

FOOD+DAIRY

BOTTLED WATER+SOFT DRINKS

t: +44 (0) 1753 515 300 f: +44 (0) 1753 515301 e: sales@hanovia.com
Hanovia Ltd, 780 Buckingham Avenue, Slough, Berkshire, SL1 4LA UK

SCAN TO KEEP INFORMED

Visit our website for further information at www.hanovia.com

910333-2001-01 ©2012 Hanovia Limited / brochure design by Breathe Marketing Limited www.breathe4u.com

Hanovia

PureLine D

Complete Range

Technical Specification

Model	Maximum Disinfection Capacity * (m^3/hr) 26mJ/cm^2 RED	Maximum Disinfection Capacity ** (m^3/hr) 120mJ/cm^2 RED	Min. T_{10} (%)	Flange Size DN	Approx Weight (kg) Chamber (Empty)	Power Supply	Power (W)
PureLine D 0007	7.3	1.3	70	40	9	18	80
PureLine D 0013	12	2.4	70	50	9	18	140
PureLine D 0023	23	4.6	70	50	9	18	270
PureLine D 0047	46	9	70	80	25	18	270
PureLine D 0089	89	15	70	150	46	22	550
PureLine D 0083	84	8.9	78	100	50	85	2500
PureLine D 0105	109	16	95	150	65	85	2500
PureLine D 0209	217	28	90	150	65	85	3500
PureLine D 0300	322	50	93	200	140	165	5500
PureLine D 0530	550	91	90	250	140	165	7000
PureLine D 0680	825	170	62	300	150	290	14000
PureLine D 0850	1000	153	76	350	210	290	14000

* The maximum disinfection capacity is based on a dose of 26mJ/cm^2 RED MS2 phage T_{10} 95% and a hydraulic velocity of 3m/s

** The maximum disinfection capacity is based on a dose of 120mJ/cm^2 RED MS2 phage T_{10} 95%

PureLine D

PureLine D 0007 - D 0089

Technical Specification

UV Chamber	
Material:	StSt 316L / 1.4404
Internal finish:	As made pipe and tube, welds left as laid electropolished and passivated
External finish:	Sateen polish (120 grit) electropolished and passivated
Process (mating) connections:	Flange DN series PN16 rated
Drain connection:	BSPT
End plate:	Removable tri-clamp except D 0089 which is a bolted plate
Degree of protection:	IP65 equivalent to NEMA 4 but not suitable for outside use
Arc tube (lamp):	Low pressure amalgam / high purity quartz
Arc tube enclosure:	High purity quartz
Number of lamps:	1
Expected lamp life:	12000-16000 hours
Temperature sensor:	On D 0089 only
UV monitor:	Wet UV monitor (down to minimum T_{10})
Working fluid temperature:	+5°C to +40°C
Maximum CIP temperature:	95°C with control cabinet electrically isolated
Hydrostatically pressure tested:	Yes to PED requirements EN13445
Operating / Design pressure:	6 bar / 7 bar
Pressure Loss:	Typically < 45 mbar including wiper
Seals:	EPDM FDA approved

Cabinet	
Material:	Polyester coated carbon steel
Degree of protection:	IP65 / NEMA 4 except D 0089 which is IP55 / NEMA 12
Supply voltages:	230V (207V to 253V) or 115V (104V to 126V except D 0089) 50/60Hz
Operating temperature range:	+5°C to +40°C
Relative humidity:	<90%
Cooling fans:	On D 0089
cable length:	5m
External contacts:	4-20mA signal for UV intensity %, Volt Free Contacts for Lamp On, Low UV warning

PureLine D

PureLine D 0007 - D 0089

Features

Operational Features:

- Lamp on/off
- Remote start/stop
- Alarm rest button
- Low UV warning
- Horizontal mounting for all or vertical mount except for D 0089

Screen Display Features:

- 2 line x 16 character backlit LCD with indication of System Status
- Remote mode
- UV intensity%
- Warning and trip messages
- Total hours run
- English language

Alarm Message Features:

- Lamp fail
- Low UV % intensity
- Unit tripped

Safety Features:

- Door interlocked cabinet isolator
- Separate door lock
- Resettable circuit breaker
- Power on LED

Options

- Validation Support Pack
- Stainless Steel cabinet (304)
- Printed operating, menu and safety guides in Chinese, French and German
- Uvtronic control 230V (207 to 263V) CE and UL approved with pre-calibrated DVGW compliant dry UV monitor
- Tri-clamp connections to BS 4825 with tri-clamp drain internal finish <0.38µm Ra maximum welds as laid electropolished and passivated
- Auto-wiper with status LED's pneumatic operation
- ANSI 150 flanges and NPT drain
- CIP maximum 130°C with cabinet electrically isolated

Approvals

- CE following the low voltage and EMC directives conforming to EN61000-3-2, 3-3, 6-2 and 6-4 230V version only

Additional Information

All dimensions are approximate for clearance purposes only. Hanovia has a policy of continuous product development, exact drawings are available on request. All specifications are subject to change without notification. Your Distributor or Hanovia Account Manager can advise on correct dosage and specific requirements.

A HALMA COMPANY

Certificate No: FM29365

Product Specific Data

Dimensions (mm)

Chamber:

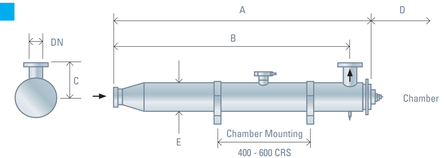

Cabinet:

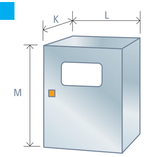

Model	Maximum Disinfection Capacity* (m^3/hr)	Min. T_{10} (%)	Dimensions (mm) unwiped dimensions A	B	C	D	E	DN	230V unwiped K**	L**	M**	230V wiped or 110V K**	L**	M**	Approx Weight (kg) Chamber (Empty)	Power Supply	Power (W)
PureLine D 0007	7.3	70	1385	1273	150	1300	102	40	225	300	550	275	400	750	9	18	80
PureLine D 0013	12.7	70	1385	1273	150	1300	102	50	225	300	550	275	400	750	9	18	140
PureLine D 0023	23	70	1385	1273	150	1300	102	50	225	300	550	275	400	750	9	18	270
PureLine D 0047	46.8	70	1437	1300	200	1300	168	80	225	300	550	275	400	750	25	18	270
PureLine D 0089	89	70	1985	1825	250	1900	206	150	225	700	750	275	700	750	46	22	550

* The maximum disinfection capacity is based on a dose of 26mJ/cm² RED MS2 phage T_{10} 95% and a hydraulic velocity limit of 3m/s

** Cabinet dimensions allow for door isolator, cable entry, bracket space and fan space on D 0089

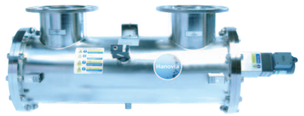

PureLine D

PureLine D 0083 - D 0850

Features

Operational Features:

- Lamp on/off
- Remote start/stop
- Selectable auto restart following power failure
- Event log
- Horizontal mounting only

Screen Display Features:

- 2 line x 20 character VFD with indication of System Status
- Remote mode
- UV intensity in mW/cm² or relative intensity (%)
- Warning and trip messages
- Total hours run
- Spares listing
- English language

Alarm Message Features:

- Lamp fail
- Low UV % intensity
- ELCB tripped
- Wiper trip
- Power failure
- Chamber over temperature
- Power supply over temperature warning and trip

Safety Features:

- Door interlocked cabinet isolator
- Separate door locks
- Power supply thermal cut out
- Resettable circuit breaker
- Earth leakage trip
- Wiper motor overload cut out

Options

- Validation Support Pack
- Stainless Steel cabinet (316)
- Printed operating, menu and safety guides in Chineses, French and German
- Tri-clamp connections to BS 4825 with tri-clamp drain
- Chamber internal finish <0.38µm Ra maximum welds ground out electropolished and passivated
- Auto-wiper with status messages electrical operation
- ANSI 150 flanges and NPT drain
- Lead length 30m or 50m
- CIP maximum 130°C with cabinet electrically isolated

Approvals

- CE following the low voltage and EMC directives conforming to EN50081-1, EN61000-4-2, 4-3, 4-5, 4-6, 4-8 and 4-11
- UL listed E149108

Additional Information

All dimensions are approximate for clearance purposes only. Hanovia has a policy of continuous product development, exact drawings are available on request. All specifications are subject to change without notification. Your Distributor or Hanovia Account Manager can advise on correct dosage and specific requirements.

A HALMA COMPANY

Certificate No: FM29365

Product Specific Data

Dimensions (mm)

Chamber:

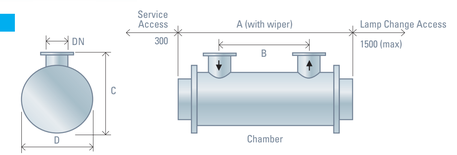

Cabinet:

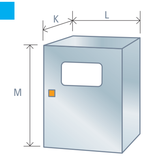

Model	Maximum Disinfection Capacity * (m^3/hr)	Min. T_{10} (%)	Dimensions (mm) A	B	C	D	DN	K**	L**	M**	Approx Weight (kg) Chamber (Empty)	Power Supply	Power (W)
PureLine D 0083	84	78	1300	710	319	240	100	370	750	850	50	85	2500
PureLine D 0105	109	95	1300	660	420	290	150	370	750	850	65	85	2500
PureLine D 0209	217	90	1300	660	420	290	150	370	750	850	65	85	3500
PureLine D 0300	322	93	1300	610	505	410	200	370	900	1100	140	165	5500
PureLine D 0530	550	90	1300	550	505	410	250	370	900	1100	140	165	7000
PureLine D 0680	825	62	1800	960	505	410	300	380	1100	1590	150	290	14000
PureLine D 0850	1000	76	1800	930	540	430	350	380	1100	1590	210	290	14000

* The maximum disinfection capacity is based on a dose of 26mJ/cm² RED MS2 phage T_{10} 95% and a hydraulic velocity limit of 3m/s

** Cabinet dimensions allow for door isolator, cable entry and bracket space

Hanovia

PureLine DC

Chlorine reduction of process waters

Technical Specification

UV Chamber

Material:	StSt 316L / 1.4404
Internal finish:	As made pipe and tube, welds left as laid electropolished and passivated
External finish:	Sateen polish (120 grit) electropolished and passivated
Process (mating) connections:	Flange DN series PN16 rated
Drain connection:	BSPT
End plate:	Removable bolted plates
Degree of protection:	IP65 equivalent to NEMA 4 but not suitable for outside use
Arc tube (lamp):	Medium pressure / high purity quartz
Arc tube enclosure:	High purity quartz
Number of arc tubes (lamps):	1 to 16 depending on model
Expected lamp life:	4000-8000 hours
Temperature sensor:	Yes
UV monitor:	Wet UV monitor (down to minimum T10)
Working fluid temperature:	+5°C to +60°C
Maximum CIP temperature:	95°C with control cabinet electrically isolated
Hydrostatically pressure tested:	Yes to PED requirements EN13445
Operating / Design pressure:	6 bar / 7 bar
Pressure Loss:	Typically < 120 mbar
Seals:	EPDM FDA approved

Cabinet

Material:	Polyester coated carbon steel
Degree of protection:	IP54 / NEMA 12
Supply voltages:	Up to 2.5kW 95V to 260V (nominal) 50/60Hz 3.5 to 7.0kW 190V to 500V (nominal) 50/60Hz >7.0kW 300V to 500V (nominal) 50/60Hz
Operating temperature range:	+5°C to +40°C
Relative humidity:	<90%
Cooling fans:	Yes
Interconnecting cable lengths:	10m
External interface:	4-20mA signal for UV intensity, Volt Free Contacts for Local/Remote, System Availble, Lamp Ready, System Warning, Common Alarm, Low UV Intensity, ELCB Trip

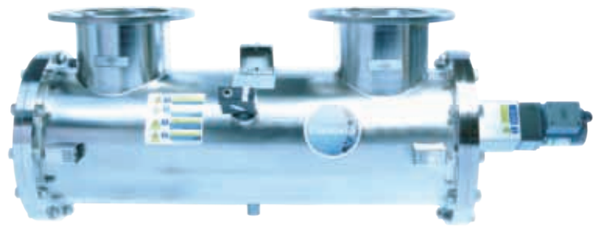

PureLine DC

Chlorine reduction of process waters

Product Specific Data

Features

Operational Features:

- Lamp on/off
- Remote start / stop
- Selectable auto restart following power failure
- Automatic wiper system electrical operation
- Event log

Screen Display Features:

- 2 line x 20 character VFD with indication of System Status
- Remote mode
- UV intensity in mW/cm^2 or relative intensity (%)
- Warning and trip messages
- Total hours run
- Spares listing
- English language

Alarm Message Features:

- Lamp fail
- Low UV intensity
- ELCB trip
- Wiper trip
- Power failure
- Chamber over temperature
- Power supply over temperature warning and trip

Safety Features:

- Door interlocked cabinet isolator
- Separate door locks
- Power supply thermal cut out
- Resettable circuit breaker
- Earth leakage trip
- Wiper motor overload cut out

Options

- Validation Support Pack
- Stainless Steel cabinet (316)
- Printed operating, menu and safety guides in Chinese, French and German
- Chamber internal finish 0.38µm welds ground out electropolished and passivated
- Automatic bleed valve
- ANSI 150 flanges and NPT drain and bleed stub
- Lead length 30m or 50m
- CIP maximum 130°C with control cabinet electrically isolated

Approvals

- CE following the low voltage and EMC directives conforming to EN50081-1, EN61000-4-2, 4-3, 4-5, 4-6, 4-8, and 4-11
- UL Listed E149108.

A HALMA COMPANY

Certificate No: FM29365

Additional Information

All dimensions are approximate for clearance purposes only. Hanovia has a policy of continuous product development, exact drawings are available on request. All specifications are subject to change without notification. Your Distributor or Hanovia Account Manager can advise on correct dosage and specific requirements.

Dimensions (mm)

Chamber and cabinet:

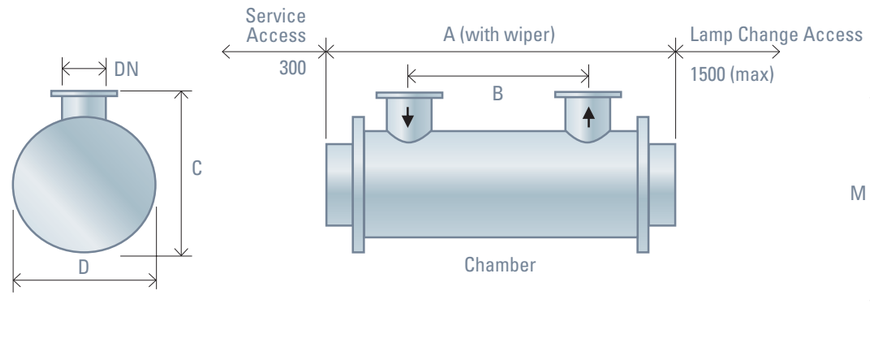

Flow m^3/hr	System for 90% reduction of chlorine	System for 99% reduction of chlorine
1	PureLine DC 0001	PureLine DC 0002
2	PureLine DC 0002	PureLine DC 0004
4	PureLine DC 0004	PureLine DC 0010
6	PureLine DC 0006	
8	PureLine DC 0010	
10	PureLine DC 0010	

Model	Maximum Dechlorination Capacity * (m^3/hr)	Min. T_{10} (%)	Dimensions (mm) A	B	C	D	DN	K**	L**	M**	Approx Weight (kg) Chamber (Empty)	Power Supply	Power (kW)
PureLine DC 0001	1	85	850	300	319	240	50	370	750	850	45	85	1.2
PureLine DC 0002	2	81	1300	710	319	240	50	370	750	850	50	85	3.5
PureLine DC 0004	4	90	1300	710	420	290	50	370	750	850	65	85	3.5
PureLine DC 0006	6	84	1300	710	420	290	50	370	900	1100	65	165	5.5
PureLine DC 0010	10	93	1300	710	505	410	50	370	900	1100	140	165	5.5

* The maximum dechlorination capacity is based on a 90% reduction of chlorine at T_{10} 95%

**Cabinet dimensions allow for door isolator, fan covers, bracket space and space for two cabinets to mount side by side on the DC 0030 and DC 0050 dimensions do not allow for cable entry which is from the side

Eight decades of continuous development has put Hanovia at the forefront of UV science and technology.

Working with the biggest names in food, beverage, electronics, pharmaceutical, aquaculture, pools and leisure, and many other industries, we have gained valuable insights into our customers' requirements and this enables us to offer you not only the finest UV systems, but a full UV solution for your industrial or leisure water treatment problems – all backed by first class technical and service support, available wherever you are around the World.

BREWING

FOOD+DAIRY

BOTTLED WATER+SOFT DRINKS

t: +44 (0) 1753 515 300 f: +44 (0) 1753 515301 e: sales@hanovia.com
Hanovia Ltd, 780 Buckingham Avenue, Slough, Berkshire, SL1 4LA UK

SCAN TO KEEP INFORMED

Visit our website for further information at www.hanovia.com

910333-1901-01 ©2012 Hanovia Limited / brochure design by Breathe Marketing Limited www.breathe4u.com

Hanovia

PureLine DO

Complete Range

Technical Specification

Model	Maximum Treatment Capacity * (m^3/hr)	Min. T_{10} (%)	Flange Size DN	Approx Weight (Kg) Chamber (Empty)	Power Supply	Power (W)
PureLine DO 0005	4.5	90	50	9	18	270
PureLine DO 0008	8.4	90	80	20	18	270
PureLine DO 0020	19.6	90	80	46	22	550
PureLine DO 0027	27	90	80	45	85	1200
PureLine DO 0031	31	90	80	50	85	2500
PureLine DO 0057	57	90	100	50	85	3500
PureLine DO 0078	78	90	100	65	85	3500
PureLine DO 0119	119	90	150	65	165	5500
PureLine DO 0181	181	93	150	140	165	5500
PureLine DO 0255	255	90	200	140	165	7000

* The maximum treatment capacity is based on a 90% reduction of ozone at T_{10} 98%

PureLine DO

PureLine DO (De-Ozonation)
Models DO 0005 - DO 0020

Technical Specification

UV Chamber	
Material:	StSt 316L / 1.4404
Internal finish:	As made pipe and tube, welds left as laid electropolished and passivated
External finish:	Sateen polish (120 grit) electropolished and passivated
Process (mating) connections:	Flange DN series PN16 rated
Drain connection:	BSPT
End plate:	Removable tri-clamp except DO 0020 which is a bolted plate
Degree of protection:	IP65 equivalent to NEMA 4 but not suitable for outside use
Arc tube (lamp):	Low pressure amalgam / high purity quartz
Arc tube enclosure:	High purity quartz
Number of lamps:	1
Expected lamp life:	12000-16000 hours
Temperature sensor:	On DO 0020 only
UV monitor:	Wet UV monitor
Working fluid temperature:	+5°C to +40°C
Maximum CIP temperature:	95°C with control cabinet electrically isolated
Hydrostatically pressure tested:	Yes to PED requirements EN13445
Operating / Design pressure:	6 bar / 7 bar
Pressure Loss:	Typically < 5 mbar
Seals:	EPDM FDA approved

Cabinet	
Material:	Polyester coated carbon steel
Degree of protection:	IP65 / NEMA 4 except DO 0020 which is IP55 / NEMA12
Supply voltages:	230V (270V to 253V) or 115V (104V to 126V except DO 0020) 50/60Hz
Operating temperature range:	+5°C to +40°C
Relative humidity:	<90%
Cooling fans:	On DO 0020
cable length:	5m
External contacts:	4-20mA signal for UV intensity %, Volt Free Contacts for Lamp On, Low UV warning

PureLine DO

PureLine DO (De-Ozonation)
Models DO 0027 - DO 0255

Technical Specification

UV Chamber	
Material:	StSt 316L / 1.4404
Internal finish:	As made pipe and tube, welds left as laid electropolished and passivated
External finish:	Sateen polish (120 grit) electropolished and passivated
Process (mating) connections:	Flange DN series PN16 rated
Drain connection:	BSPT
End plate:	Removable bolted plates
Degree of protection:	IP65 equivalent to NEMA 4 but not suitable for outside use
Arc tube (lamp):	Medium pressure / high purity quartz
Arc tube enclosure:	High purity quartz
Number of lamps:	1
Expected lamp life:	4000-8000 hours
Temperature sensor:	Yes
UV monitor:	Wet UV monitor (down to minimum T_{10})
Working fluid temperature:	+5°C to +60°C
Maximum CIP temperature:	95°C with control cabinet electrically isolated
Hydrostatically pressure tested:	Yes to PED requirements EN13445
Operating / Design pressure:	6 bar / 7 bar
Pressure Loss:	Typically < 50 mbar
Seals:	EPDM FDA approved

Cabinet	
Material:	Polyester coated carbon steel
Degree of protection:	IP54 equivalent to NEMA 12
Supply voltages:	Up to 2.5kW 95V to 260V (nominal) 50/60Hz 3.5 to 7.0kW 190V to 500V (nominal) 50/60Hz >7.0kW 300V to 500V (nominal) 50/60Hz
Operating temperature range:	+5°C to +40°C
Relative humidity:	<90%
Cooling fans:	Yes
cable length:	10m
External contacts:	4-20mA signal for UV intensity, Volt Free Contacts for Local/Remote, System Available, Lamp Ready, System Warning, Common Alarm, Low UV Intensity, ELCB Trip

PureLine DO

PureLine DO (De-Ozonation)
Models DO 0005 - DO 0020

Product Specific Data

Features

Operational Features:

- Lamp on/off
- Remote start/stop
- Alarm rest button
- Low UV warning
- Horizontal mounting for all or vertical mount except for DO 0020

Screen Display Features:

- 2 line x 16 character backlit LCD with indication of System Status
- Remote mode
- UV intensity %
- Warning and trip messages
- Total hours run
- English language

Alarm Message Features:

- Lamp fail
- Low UV % intensity
- Unit tripped

Safety Features:

- Door interlocked cabinet isolator
- Separate door lock
- Resettable circuit breaker
- Power on LED

Options

- Validation Support Pack
- Stainless steel cabinet (304)
- Printed operating, menu and safety guides in Chinese, French and German
- Uvtronic control 230V (207 to263V) CE and UL approved with pre-calibrated DVGW compliant dry UV monitor
- Tri-clamp connections to BS 4825 with tri-clamp drain, chamber internal finish <0.38µm Ra maximum welds as laid electropolished and passivated
- ANSI 150 flanges and NPT drain
- CIP maximum 130°C with lamp off

Approvals

- CE following the low voltage and EMC directives conforming to EN61000-3-2, 3-3, 6-2 and 6-4 230V version only

Dimensions (mm)

Chamber:

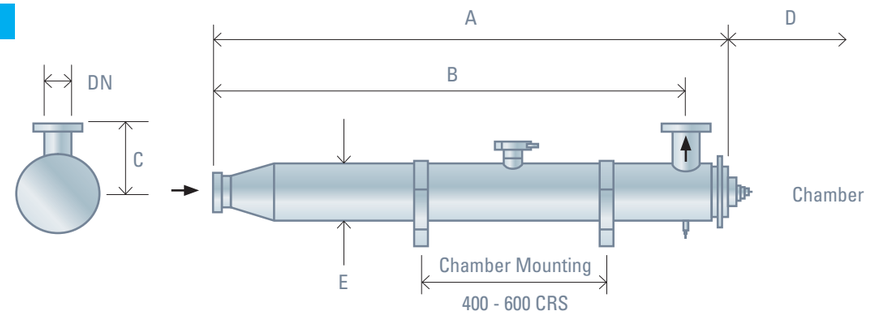

Cabinet:

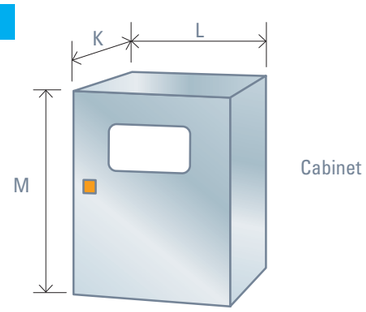

Model	Maximum Treatment Capacity* (m^3/hr)	Min. T_{10} (%)	Dimensions (mm) unwiped dimensions A	B	C	D	E	DN	230V unwiped K**	L**	M**	110V K**	L**	M**	Approx Weight (Kg) Chamber (Empty)	Power Supply	Power (W)
PureLine DO 0005	4.5	90	1385	1273	150	1300	102	50	225	300	550	275	400	750	9	18	270
PureLine DO 0008	8.4	90	1437	1300	200	1300	168	80	225	300	550	275	400	750	25	18	270
PureLine DO 0020	19.6	90	1985	1825	250	1900	206	80	275	700	750	275	700	750	46	22	550

* The maximum treatment capacity is based on a 90% reduction of ozone T_{10} >98%

** Cabinet dimensions allow for door isolator, cable entry and bracket space and fan space

Additional Information

All dimensions are approximate for clearance purposes only. Hanovia has a policy of continuous product development, exact drawings are available on request. All specifications are subject to change without notification. Your Distributor or Hanovia Account Manager can advise on correct dosage and specific requirements.

A HALMA COMPANY

Certificate No: FM29365

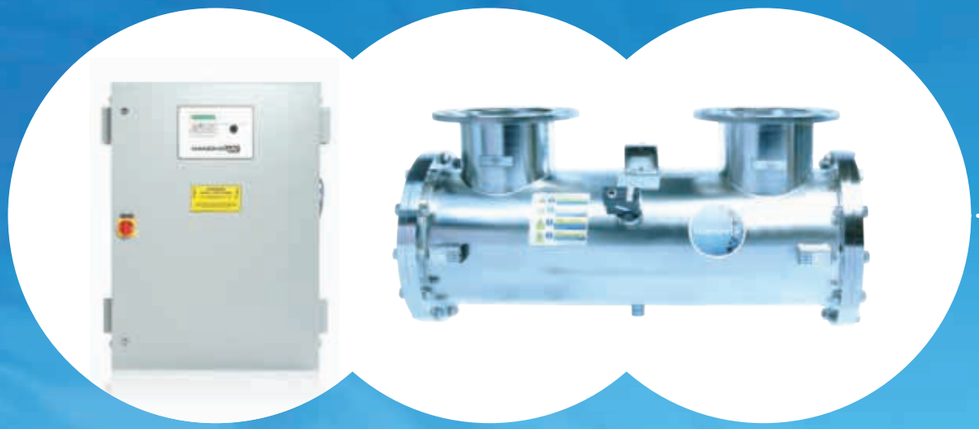

PureLine DO

PureLine DO (De-Ozonation)
Models DO 0027 - DO 0255

Features

Operational Features:

- Lamp on/off
- Remote start/stop
- Selectable auto restart following power failure
- Event log
- Horizontal mounting only

Screen Display Features:

- 2 line x 20 character VFD with indication of System Status
- Remote mode
- UV intensity in mW/cm^2 or relative intensity (%)
- Warning and trip messages
- Total hours run
- Spares listing
- English language

Alarm Message Features:

- Lamp fail
- Low UV intensity
- ELCB trip
- Power failure
- Chamber over temperature
- Power supply over temperature warning and trip

Safety Features:

- Door interlocked cabinet isolator
- Separate door locks
- Power supply thermal cut out
- Resettable circuit breaker
- Earth leakage trip

Options

- Validation Support Pack
- Stainless steel cabinet (316)
- Printed operating, menu and safety guides in Chineses, French and German
- Tri-clamp connections to BS 4825 with tri-clamp drain
- Chamber internal finish <0.38µm Ra maximum welds ground out electropolished and passivated
- ANSI 150 flanges and NPT drain
- Lead length 30m or 50m
- CIP maximum 130°C with cabinet electrically isolated

Approvals

- CE following the low voltage and EMC directives conforming to EN50081-1, EN61000-4-2, 4-3, 4-5, 4-6, 4-8 and 4-11
- UL listed E149108

Additional Information
All dimensions are approximate for clearance purposes only. Hanovia has a policy of continuous product development, exact drawings are available on request. All specifications are subject to change without notification. Your Distributor or Hanovia Account Manager can advise on correct dosage and specific requirements.

A HALMA COMPANY

Certificate No: FM29365

Product Specific Data

Dimensions (mm)

Chamber:

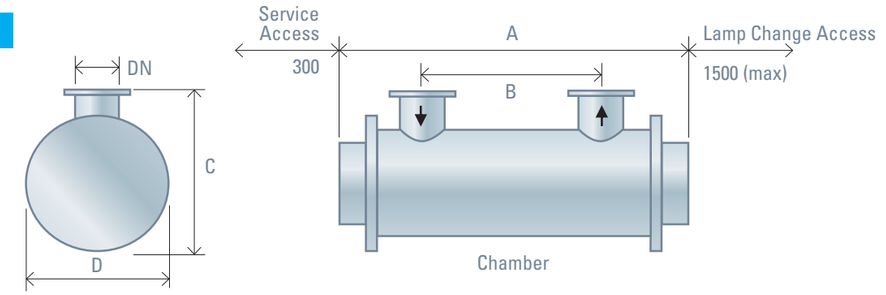

Cabinet:

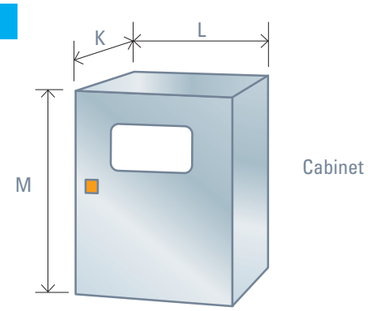

Model	Maximum Treatment Capacity* (m^3/hr)	Min. T_{10} (%)	Dimensions (mm)								Approx Weight (Kg)		
			A	B	C	D	DN	K**	L**	M**	Chamber (Empty)	Power Supply	Power (W)
PureLine DO 0027	27	90	850	240	319	240	80	370	750	850	45	85	1200
PureLine DO 0031	31	90	1300	710	319	240	80	370	750	850	50	85	2500
PureLine DO 0057	57	90	1300	710	319	240	100	370	750	850	50	85	3500
PureLine DO 0078	78	90	1300	710	420	290	100	370	750	850	65	85	3500
PureLine DO 0119	119	90	1300	660	420	290	150	370	900	1100	65	165	5500
PureLine DO 0181	181	93	1300	660	505	410	150	370	900	1100	140	165	5500
PureLine DO 0255	255	90	1300	610	505	410	200	370	900	1100	140	165	7000

* The maximum treatment capacity is based on a 90% reduction of ozone at T_{10} >98%

** Cabinet dimensions allow for door isolator, cable entry and bracket space

Hanovia

Eight decades of continuous development has put Hanovia at the forefront of UV science and technology.

Working with the biggest names in food, beverage, electronics, pharmaceutical, aquaculture, pools and leisure, and many other industries, we have gained valuable insights into our customers' requirements and this enables us to offer you not only the finest UV systems, but a full UV solution for your industrial or leisure water treatment problems – all backed by first class technical and service support, available wherever you are around the World.

BREWING

FOOD+DAIRY

BOTTLED WATER+SOFT DRINKS

t: +44 (0) 1753 515 300 f: +44 (0) 1753 515301 e: sales@hanovia.com
Hanovia Ltd, 780 Buckingham Avenue, Slough, Berkshire, SL1 4LA UK

SCAN TO KEEP INFORMED

Visit our website for further information at www.hanovia.com

910338-2201-01 ©2012 Hanovia Limited / brochure design by Breathe Marketing Limited www.breathe4u.com

Hanovia

PureLine PQ

Complete Range

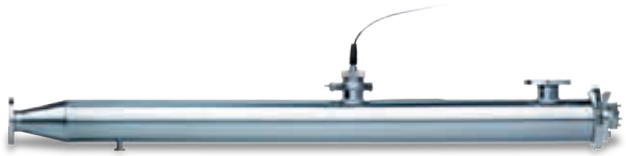

Technical Specification

Model	Maximum Disinfection Capacity * (m^3/hr) 32mJ/cm^2 RED	Maximum Disinfection Capacity ** (m^3/hr) 120mJ/cm^2 RED	Min. T_{10} (%)	Flange Size DN	Approx Weight (kg) Chamber (Empty)	Power Supply	Power (W)
PureLine PQ 0005	5.1	0.9	60	40	9	37	80
PureLine PQ 0008	8.1	1.7	60	50	9	37	140
PureLine PQ 00016	16	3.9	60	50	9	37	270
PureLine PQ 0030	32	5.1	60	80	25	37	270
PureLine PQ 0090	88	16	60	150	46	37	550
PureLine PQ 0200	205	50	50	200	50	135	5400
PureLine PQ 0360	390	98	50	200	50	180	10700
PureLine PQ 1100	910	225	50	350	130	220	17100

* The maximum disinfection capacity is based on a dose of 32mJ/cm^2 RED MS2 phage T_{10} 95% fouling factor 0.95 and end of lamp life (EOLL) 0.9

** The maximum disinfection capacity is based on a dose of 120mJ/cm^2 RED MS2 phage T_{10} 95% fouling factor 0.95 and end of lamp life (EOLL) 0.9

PureLine PQ

PureLine PQ (Disinfection) Models
PQ 0005 - PQ 0090

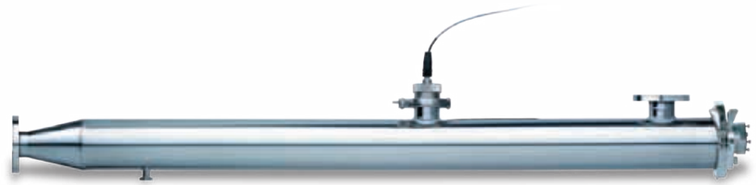

Technical Specification

UV Chamber

Material:	StSt 316L / 1.4404
Internal finish:	As made pipe and tube, welds left as laid electropolished and passivated
External finish:	Sateen polish (120 grit) electropolished and passivated
Process (mating) connections:	Flange DN series PN16 rated
Drain connection:	BSPT
End plate:	Removable tri-clamp except PQ 0090 which is a bolted plate
Degree of protection:	IP65 equivalent to NEMA 4 but not suitable for outside use
Arc tube (lamp):	Low pressure amalgam / high purity quartz
Arc tube enclosure:	High purity quartz
Number of lamps:	1
Expected lamp life:	12000-16000 hours
Temperature sensor:	Yes
UV monitor:	Pre calibrated DVGW compliant dry UV monitor
Working fluid temperature:	+5°C to +40°C
Maximum CIP temperature:	95°C with control cabinet electrically isolated
Hydrostatically pressure tested:	Yes to PED requirements EN13445
Operating / Design pressure:	6 bar / 7 bar
Pressure Loss:	Typically < 20 mbar including wiper
Seals:	EPDM FDA approved WQA certified to NSF61 except PQ 0005

Cabinet

Material:	Polyester coated carbon steel
Degree of protection:	IP66 / NEMA 4
Supply voltages:	230V (207V to 263V) 50/60Hz
Operating temperature range:	+5°C to +40°C
Relative humidity:	<90%
Cooling fans:	No
cable length:	10m
External contacts:	4-20mA signal for UV dose and UV intensity, 24V dc 10mA max for trip, warning, system available, system remote, lamp running, replace lamp and Modbus for complete remote control

PureLine PQ

PureLine PQ (Disinfection) Models
PQ0200 - PQ 1100

Technical Specification

UV Chamber

Material:	Stainless steel 316L
Internal finish:	<0.8µm Ra max, welds left as laid electropolished and passivated
External finish:	Brushed to K280 electropolished and passivated
Process (mating) connections:	Flange DN series PN10 rated
Drain connection:	BSPT
End plate:	Removable bolted plates
Degree of protection:	IP54 (NEMA 12)
Arc tube (lamp):	Medium pressure / high purity quartz
Arc tube enclosure:	High purity quartz
Number of lamps:	2 to 4
Expected lamp life:	9000 hours
Temperature sensor:	Yes
UV monitor:	4 Pre calibrated DVGW compliant dry UV monitors
Working fluid temperature:	+5°C to +40°C
Maximum CIP temperature:	95°C with electrical cabinet isolated
Hydrostatically pressure tested:	Yes
Operating / Design pressure:	6 bar / 7 bar
Pressure Loss:	Typically < 100 mbar
Seals:	Viton and NBR 90 approved to NSF61

Cabinet

Material:	Painted carbon steel
Degree of protection:	IP54 (NEMA 12)
Supply voltages:	Model PQ 0200 and PQ 0360 200-300V 50/60 Hz Model PQ 1100 400V 50/60 Hz or 480V 50/60 Hz
Operating temperature range:	+5°C to 35°C
Relative humidity:	<90%
Cooling fans:	Yes
cable length:	10m
External contacts:	4-20mA signal for UV dose and UV intensity, Volt free contacts for trip, warning, system available, system remote, UV on, system ready, dose valid, warming, cooling, system OK, wiper fault, ground fault, chamber/cabinet trip, cabinet temperature warning, chamber temperature warning, low UV, lamp failure, Modbus output. Inputs remote start / stop, remote reset, remote wipe cycle.

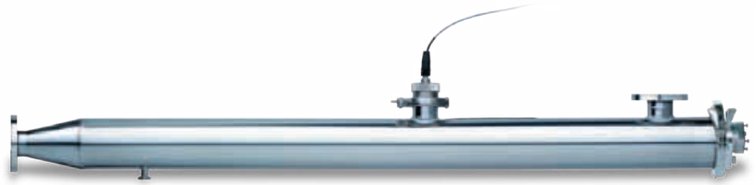

PureLine PQ

PureLine PQ 0005 - PQ 0090

Product Specific Data

Features

Operational Features:

- Lamp on/off
- Remote / local operation
- Validated dose calculation from fixed or variable flow with or without UVT input
- Option of running with dose algorithm which automatically compensates for changes in UV transmittance
- Selectable auto restart following power failure
- Event log (2000), 3 level operating menu
- Pre calibrated DVGW compliant dry UV monitor
- Dry monitor port with light trap

Screen Display Features:

- 4 line x 20 character backlit LCD with indication of System Status
- Remote / local mode
- UV dose or intensity
- Alarms and warning list
- Date and time
- English language

Alarm Message Features:

- Lamp fail
- Low UV dose or intensity
- Operating outside valdated conditions
- System warning and trip messages

Safety Features:

- Door interlocked cabinet isolator
- Separate door locks
- Ballast thermal cut out
- Resettable circuit breaker
- UV monitor port shutters (light trap)

Options

- Validation support pack
- Stainless steel cabinet (304)
- 30m lead lengths
- Printed operating menu and safety guides in Chinese, French and German
- Auto-wiper pneumatic operation
- ANSI 150 flanges and NPT drain
- Tri-clamp connections to BS 4825 with tri-clamp drain internal finish <0.38µm Ra maximum welds as laid electropolished and passivated
- CIP maximum 130°C with cabinet electrically isolated
- In field reference monitor and intensity meter (LP)

Approvals

- UL 61010-1 and IEC 61010-1
- CE following the low voltage directive and EMC directives conforming to EN61000-3-2,3-3, 4-2, 4-3, 4-4, 4-5, 4-6, 4-8 and 4-11 and 61326-1 class A
- Carollo certified to USEPA / UVDGM (2006)
- UV monitor is DVGW W294-3 approved
- All wetted materials WQA certified to NSF 61 except PQ 0005

Additional Information

All dimensions are approximate for clearance purposes only. Hanovia has a policy of continuous product development, exact drawings are available on request. All specifications are subject to change without notification. Your Distributor or Hanovia Account Manager can advise on correct dosage and specific requirements.

A HALMA COMPANY

Certificate No: FM29365

Dimensions (mm)

Chamber:

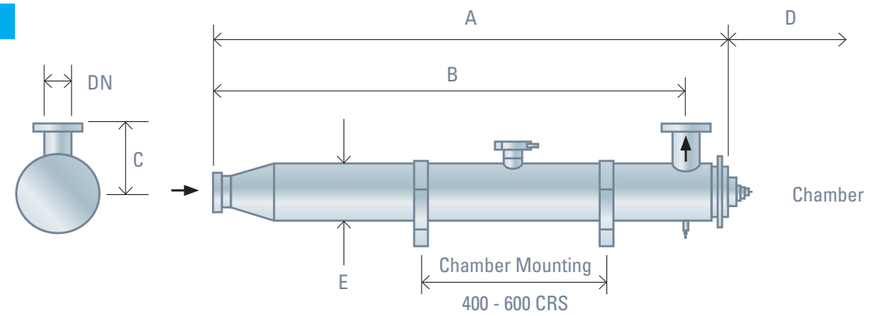

Cabinet:

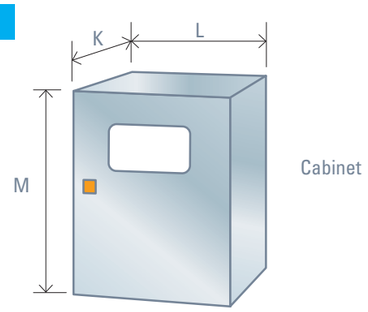

Model	Maximum Disinfection Capacity* (m^3/hr)	Min. T_{10} (%)	Dimensions (mm) unwiped dimensions A	B	C	D	E	DN	230V unwiped K**	L**	M**	Approx Weight (kg) Chamber (Empty)	Power Supply	Power (W)
PureLine PQ 0005	5.1	60	1385	1273	150	1300	102	40	260	600	950	9	37	80
PureLine PQ 0008	8.1	60	1385	1273	150	1300	102	50	260	600	950	9	37	140
PureLine PQ 0016	16	60	1385	1273	150	1300	102	50	260	600	950	9	37	270
PureLine PQ 0030	32	60	1437	1300	200	1300	168	80	260	600	950	25	37	270
PureLine PQ 0090	88	60	1985	1825	250	1900	206	150	260	600	950	46	37	550

* The maximum disinfection capacity is based on a dose of 32mJ/cm^2 RED MS2 phage T_{10} 95% fouling factor 0.95 and end of lamp life (EOLL) 0.9

** Cabinet dimensions allow for door isolator, cable entry, bracket space. For cooling add 300mm to L and 150mm to M dimension

PureLine PQ

PureLine PQ 0200 - PQ 1100

Features

Operational Features:

- Lamp on/off
- Remote / local operation
- Validated dose calculation from fixed or variable flow with or without UVT input
- Auto-wiper electric operation
- Stepless lamp power 33% to 100%
- 4 level operating menu
- Pre calibrated DVGW compliant dry UV monitors one per lamp
- Dry monitor port

Screen Display Features:

- 4 line x 20 character backlit LCD with indication of System Status
- Remote / local mode
- UV dose or intensity
- Alarms and warning list
- Date and time
- English language

Alarm Message Features:

- Lamp fail
- Low UV dose or intensity
- System warning and trip messages

Safety Features:

- Door interlocked cabinet isolator
- Separate door locks
- Ballast thermal cut out
- Resettable circuit breaker

Options

- Validation support pack
- Stainless steel cabinet (304)
- 30m lead lengths
- Printed operating, menu and safety guides in Chinese, French and German
- ANSI 150 flanges and NPT drain
- In field reference monitor and intensity meter (MP)

Approvals

- UL 508A Shop Approval (except PQ 1100)
- CE following the machine directive 2006/42/EC, EMC directive 2004/108/EC, low voltage directive 2006/95/EC and 93/68/EEC including NEN-EN-ISO 12100-1:2003, 12100-2:2003, 13857:2008, 13850:2006, NEN-EN 349+A1:2008, EN 61000-6-3:2007 and 61000-6-2:2005
- Carollo tested in accordance with USEPA
- UV monitor is DVGW W294-3 approved
- All wetted materials WQA certified to NSF 61

Additional Information

All dimensions are approximate for clearance purposes only. Hanovia has a policy of continuous product development, exact drawings are available on request. All specifications are subject to change without notification. Your Distributor or Hanovia Account Manager can advise on correct dosage and specific requirements.

A HALMA COMPANY

Certificate No: FM29365

Product Specific Data

Dimensions (mm)

Chamber:

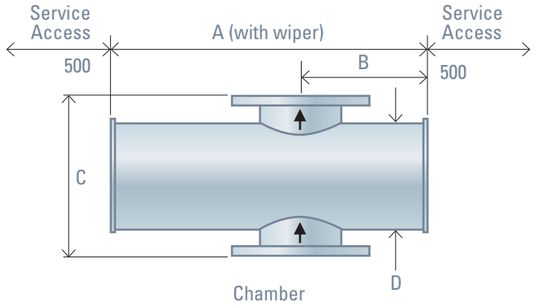

Cabinet:

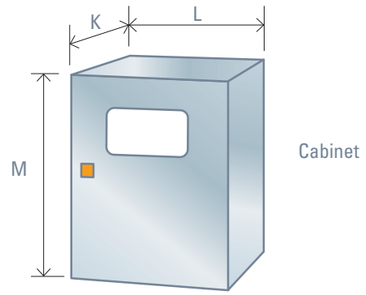

Model	Maximum Disinfection Capacity * (m^3/hr)	Min. T_{10} (%)	Dimensions (mm) A	B	C	D	DN	K**	L**	M**	Approx Weight (kg) Chamber (Empty)	Power Supply	Power (W)
PureLine PQ 0200	205	50	780	310	400	273	200	400	800	1000	50	135	5400
PureLine PQ 0360	390	50	780	310	400	273	200	400	1200	1200	50	180	10700
PureLine PQ 1100	910	50	896	368	550	406	350	400	1200	1200	130	220	17100

* The maximum disinfection capacity is based on a dose of 32mJ/cm^2 RED MS2 phage T_{10} 95%

** Cabinet dimensions do not allow for door isolator, cable entry and bracket space. For cooling add 600mm to L and M dimensions (300mm each side)

Hanovia

Eight decades of continuous development has put Hanovia at the forefront of UV science and technology.

Working with the biggest names in food, beverage, electronics, pharmaceutical, aquaculture, pools and leisure, and many other industries, we have gained valuable insights into our customers' requirements and this enables us to offer you not only the finest UV systems, but a full UV solution for your industrial or leisure water treatment problems – all backed by first class technical and service support, available wherever you are around the World.

BREWING

FOOD+DAIRY

BOTTLED WATER+SOFT DRINKS

t: +44 (0) 1753 515 300 f: +44 (0) 1753 515301 e: sales@hanovia.com
Hanovia Ltd, 780 Buckingham Avenue, Slough, Berkshire, SL1 4LA UK

SCAN TO KEEP INFORMED

Visit our website for further information at www.hanovia.com

910339-2101-01 ©2012 Hanovia Limited / brochure design by Breathe Marketing Limited www.breathe4u.com

Hanovia

PureLine S

Sugar Syrup Disinfection Range

Technical Specification

UV Chamber

Material:	StSt 316L / 1.4404
Internal finish:	As made pipe and tube, welds left as laid electropolished and passivated
External finish:	Sateen polish (120 grit) electropolished and passivated
Process (mating) connections:	Flange DN series PN16 rated
Drain connection:	BSPT
End plate:	Removable end plates
Degree of protection:	IP65 equivalent to NEMA 4 but not suitable for outside use
Arc tube (lamp):	Medium pressure / high purity quartz
Arc tube enclosure:	High purity quartz
Number of lamps:	1 to 4
Expected lamp life:	4000-8000 hours
Temperature sensor:	Yes
UV monitor:	Wet UV monitor (down to minimum T_{10})
Working fluid temperature:	+5°C to +75°C
Maximum CIP temperature:	95°C with control cabinet electrically isolated
Hydrostatically pressure tested:	Yes to PED requirements EN13445
Operating / Design pressure:	6 bar / 7 bar
Pressure Loss:	Dependant on sugar viscosity
Seals:	EPDM FDA approved

Cabinet

Material:	Polyester coated carbon steel
Degree of protection:	IP54 equivalent to NEMA 12
Supply voltages:	Up to 2.5kW 95V to 260V (nominal) 50/60Hz 3.5 to 7.0kW 190V to 500V (nominal) 50/60Hz >7.0kW 300V to 500V (nominal) 50/60Hz
Operating temperature range:	+5°C to +40°C
Relative humidity:	<90%
Cooling fans:	Yes
Interconnecting cable lengths:	10m
External contacts:	4-20mA signal for UV intensity, Volt Free Contacts for Local/Remote, System Availble, Lamp Ready, System Warning, Common Alarm, Low UV Intensity, ELCB Trip

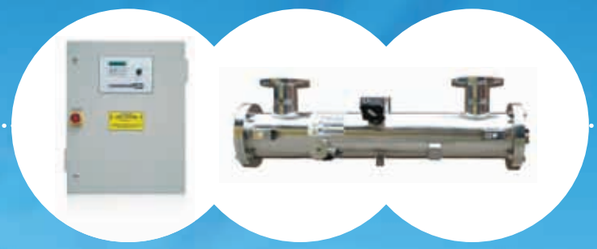

PureLine S

Sugar Syrup Disinfection Range

Features

Operational Features:

- Lamp on/off
- Remote start / stop
- Selectable auto restart following power failure
- Event log
- Horizontal mounting only

Screen Display Features:

- 2 line x 20 character VFD with indication of System Status
- Remote mode
- UV intensity in mW/cm^2 or relative intensity (%)
- Warning and trip messages
- Total hours run
- Spares listing
- English language

Alarm Message Features:

- Lamp fail
- Low UV intensity
- ELCB trip
- Power failure
- Chamber over temperature
- Power supply over temperature warning and trip

Safety Features:

- Door interlocked cabinet isolator
- Separate door locks
- Power supply thermal cut out
- Resettable circuit breaker
- Earth leakage trip

Options

- Validation Support Pack
- Stainless Steel cabinet (316)
- Printed operating, menu and safety guides in Chinese, French and German
- Tri-clamp connections to BS 4825 with tri-clamp drain
- Chamber internal finish <0.38µm Ra maximum welds ground out electropolished and passivated
- ANSI 150 flanges and NPT drain
- Lead length 30m or 50m
- CIP maximum 130°C with cabinet electrically isolated
- Stainless steel bleed valve

Approvals

- CE following the low voltage and EMC directives conforming to EN50081-1, EN61000-4-2, 4-3, 4-5, 4-6, 4-8, and 4-11
- UL Listed E149108

Additional Information

All dimensions are approximate for clearance purposes only. Hanovia has a policy of continuous product development, exact drawings are available on request. All specifications are subject to change without notification. Your Distributor or Hanovia Account Manager can advise on correct dosage and specific requirements.

A HALMA COMPANY

Certificate No: FM29365

Product Specific Data

Dimensions (mm)

Chamber for model 0060:

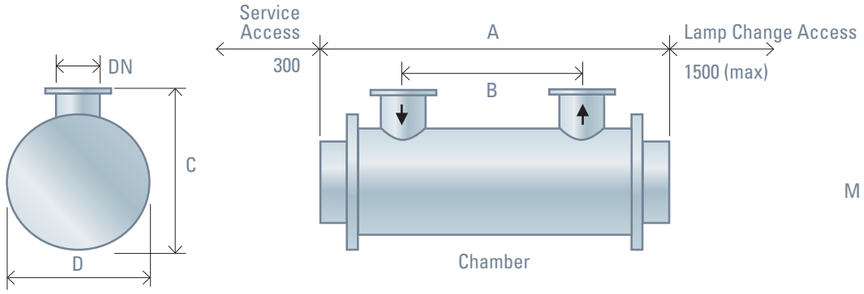

Cabinet (all models):

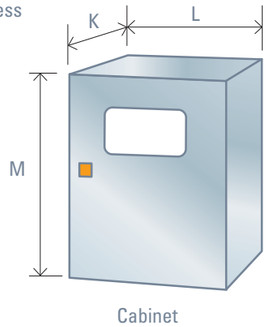

Chamber for models 0005 - 0015:

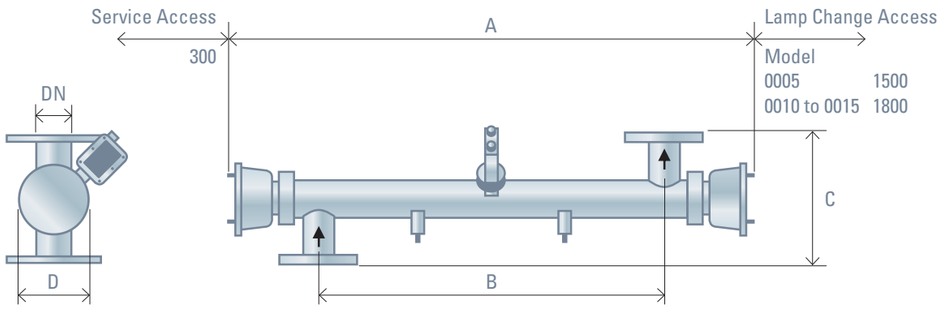

Model	Maximum Treatment Capacity * (m^3/hr)	Min. T_{10} (%)	Dimensions (mm) A	B	C	D	DN	K**	L**	M**	Approx Weight (Kg) Chamber (Empty)	Power Supply	Power (W)
PureLine S 0005	5	30	955	585	188	160	40	370	750	850	20	85	2500
PureLine S 0010	10	20	1210	825	280	160	65	370	750	850	25	85	3500
PureLine S 0015	15	15	1385	100	280	160	65	370	900	1100	30	165	5500
PureLine S 0060	60	30	1090	710	319	240	100	380	1100	1590	50	290	10400

* The maximum treatment capacity is based on a 90mJ/cm^2 average dose, EC number 2 sugar dissolved at 67 Brix T_{10} 40%

**Cabinet dimensions allow for door isolator, cable entry and bracket space.

Hanovia

Eight decades of continuous development has put Hanovia at the forefront of UV science and technology.

Working with the biggest names in food, beverage, electronics, pharmaceutical, aquaculture, pools and leisure, and many other industries, we have gained valuable insights into our customers' requirements and this enables us to offer you not only the finest UV systems, but a full UV solution for your industrial or leisure water treatment problems – all backed by first class technical and service support, available wherever you are around the World.

BREWING

FOOD+DAIRY

BOTTLED WATER+SOFT DRINKS

t: +44 (0) 1753 515 300 f: +44 (0) 1753 515301 e: sales@hanovia.com
Hanovia Ltd, 780 Buckingham Avenue, Slough, Berkshire, SL1 4LA UK

SCAN TO KEEP INFORMED

Visit our website for further information at www.hanovia.com

910339-2301-01 ©2012 Hanovia Limited / brochure design by Breathe Marketing Limited www.breathe4u.com

Hanovia

the power in UV technology

SPAS

COMPETITION

MUNICIPAL

HOTELS

HYDROTHERAPY

Breathe easy, it's Hanovia UV...

From the smallest private pool to the largest leisure complex, you need to meet regulations for water quality and make sure that your pool users are safe and comfortable in the water.

Chloramines in your pool water can cause unpleasant smells and even allergic reactions. Hanovia UV systems destroy them as well as dangerous waterborne micro-organisms including Cryptosporidium and Giardia. Your pool users will enjoy fresher-smelling, clearer and more hygienic water, while you enjoy the reliability and effectiveness of a highly efficient water treatment system.

Safety and comfort for everyone in the pool

A superior solution that guarantees high quality pool water

The benefits of Hanovia's UV treatment system are far-reaching.

Health and hygiene

- Destroys chloramines - easily meets statutory combined chlorine levels and typically reduces levels to less than 0.5ppm
- Effective against all micro-organisms, including the chlorine-resistant pathogens Cryptosporidium and Giardia
- Improves water clarity
- Treats full recirculating flow

An energy efficient and environmentally responsible system

- Reduces the need for dilution
- Cuts the use of chemicals and avoids the need for routine shock dosing with chlorine
- Reduces requirement for free chlorine residual
- Creates no hazardous by-products
- Reduces corrosion of steel structures – minimising maintenance costs

Controlling costs

- Cuts your use of chemicals
- Requires little maintenance
- Reduces energy bills if you use the Power Switching option
- Reduces water bills, as there is no need to control combined chlorine levels by dilution and back-washing
- Avoids repair and replacement costs from chemical wear and tear on pool fittings

Attractive pool environment

- Increases bather and employee comfort
- Appeals to new customers and visitors and enhances your reputation
- Competitive advantage compared to other local leisure facilities

"Since UV was installed, chloramine levels are as low as 0.2 ppm, which has significantly improved both water and air quality. TDS levels have also halved since UV was introduced, which means the water is now much clearer. Pool users have really noticed and commented on the improved pool atmosphere. In fact, it actually helps attract more customers."

BOB ELLIS, ENGINEERING SERVICES MANAGER, ROYAL RUSSELL SCHOOL, UNITED KINGDOM

How UV works in pools

Hanovia UV improves pool water in two ways:

Reduces chloramines

Chloramines are the unpleasant chemicals formed when chlorine combines with the nitrogenous compounds (uric acid, urea, ammonia, histidine and creatinine) introduced by bathers. They are responsible for eye irritation, headaches, unpleasant odours and occasional skin irritation, particularly in indoor pools. Swimmers, lifeguards, instructors and coaches can all be affected. Chloramines also damage the structure of the pool, corroding structural steel and roof supports.

UV treatement is a high performance alternative to super-chlorination (or "shock" dosing), dilution with fresh water or activated carbon. Low pressure UV lamps are not effective against all chloramines. Hanovia's medium pressure UV lamps break the bonds within chloramine molecules and destroy them. The lamps' polychromatic spectrum includes the optimum wavelengths for chloramine photolysis.

Monochloramine (NH_2Cl): 245 nm
Dichloramine ($NHCl_2$): 297 nm
Trichloramine (NCl_3): 260 nm and 340 nm

The polychromatic spectrum of Hanovia medium pressure lamps includes all these wavelengths. The monochromatic UV emission of low pressure lamps at 253.7 nm will not be absorbed by dichloramine or trichloramine molecules and no photolysis of these compounds will occur.

Disinfects and clears comprehensively

The disinfecting power of Hanovia UV means you can drastically reduce residual chlorine levels to as little as 0.5 ppm. Organic molecules in the pool water are oxidised, for noticeably improved water clarity.

Even chlorine-resistant pathogens like Cryptosporidium and Giardia are effectively treated with UV. Cryptosporidium is responsible for hundreds of thousands of outbreaks of gastric illness every year, with outbreaks often traced back to swimming pools. It is a parasite whose structure makes it resistant to chlorine disinfection. Using Hanovia UV technology you can reduce its presence in your water by 99.99%, according to the United States Environmental Protection Agency.

Eighteen outbreaks of Cryptosporidiosis associated with swimming pools are known to have occurred in the UK between 1989 and 1999. In the USA from 2003 to 2004, Cryptosporidium was responsible for 55.6% of gastroenteritis outbreaks associated with swimming pools.

CONTROL SYSTEM

- The Photon II controller is Hanovia's microprocessor-driven control module
- Menu-driven interface
- Real time display of performance parameters
- Dose computation from fixed or variable flow
- Optional power optimisation 'Power Switching' facility
- Automatic on/off timer

ARC TUBE

- Up to 6 Arc Tubes per chamber
- Simple to replace
- Hanovia is the only UV systems manufacturer to manufacture its own medium pressure arc tubes, for ultimate quality and performance
- All Hanovia arc tubes are manufactured and tested to international standards.

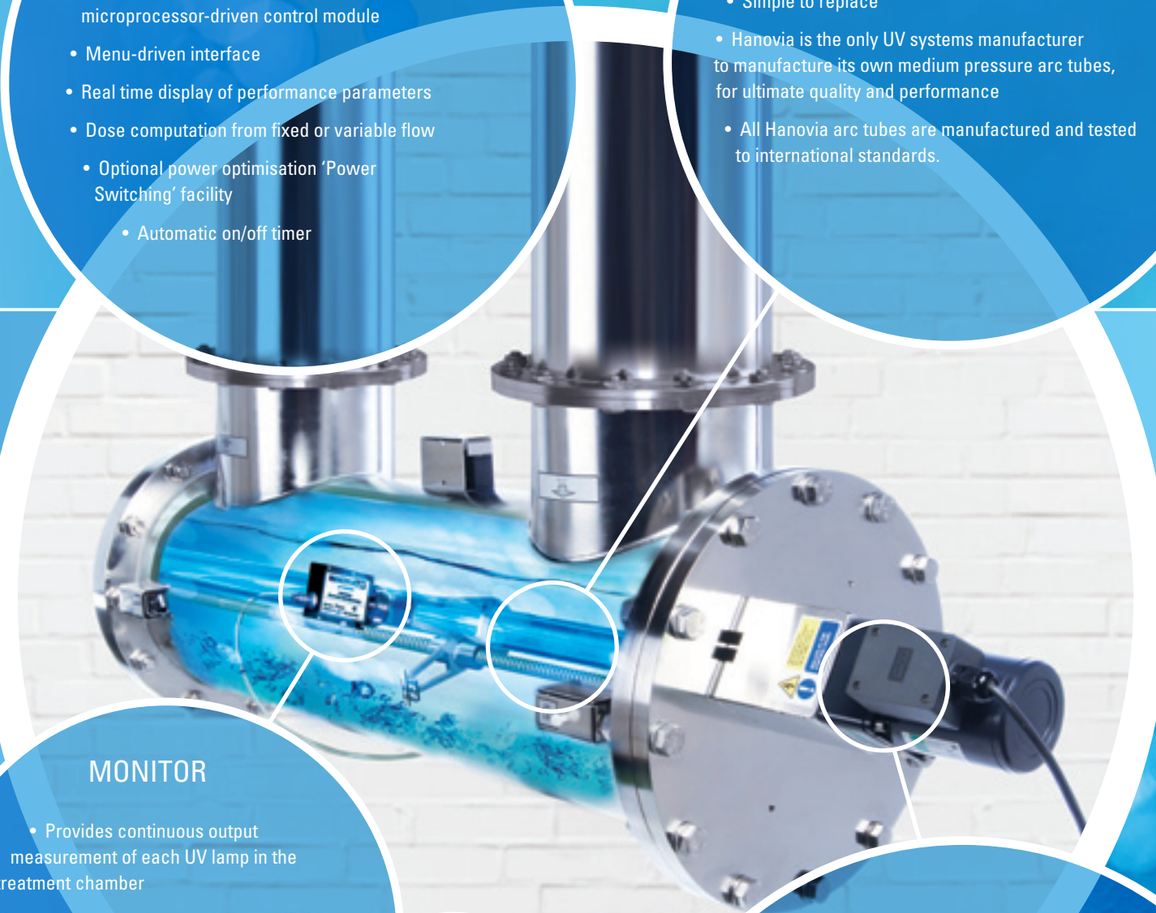

MONITOR

- Provides continuous output measurement of each UV lamp in the treatment chamber
- Keeps system running at maximum efficiency
- With any change in process conditions, the system can switch to new power level or initiate a local or remote alarm
- Optional individual monitor for each lamp

TREATMENT CHAMBER

- Capacity up to 1,800 m3 per hour (7,930 gpm) for a single chamber
- 316L stainless steel construction (even higher grades for aggressive water conditions)
- Hydrostatically pressure tested to PED requirements
- Flange connections to suit any pipe size
- Quartz sleeves, mounted axially, house arc tubes and permit replacement of arc tubes without interrupting flow
- Automatic wiper maintains operational efficiency, even for poor quality water
- Optimum hydraulic design for uniform treatment
- Drain valve

How UV works

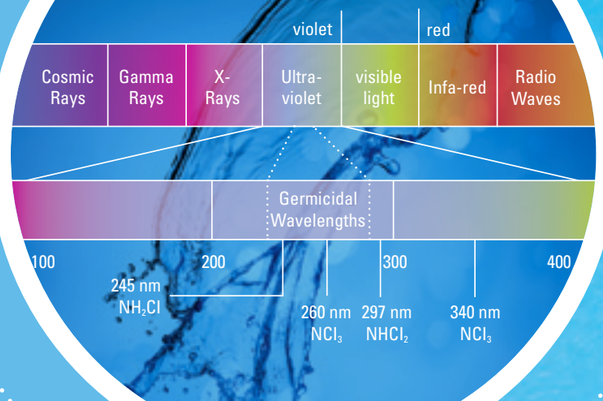

Spas

Your reputation and success depend on providing a pleasant, relaxing and safe environment for clients who use your pools. Hanovia UV gives you peace of mind that hygiene standards are being met and exceeded and your bathers are enjoying clear and fresh-smelling conditions without irritation from extra chemicals.

Competition

Water clarity and elimination of micro-organisms is crucial for performance swimmers who need to operate at peak health and fitness levels. Hanovia UV steps up to the mark with systems designed to treat high traffic and large-sized fitness pools.

Municipal

With a high number of visitors every day, and peak periods of dense occupation, your pool hygiene management system needs to be robust and effective. Managing costs in the public sector is a key focus area too. Hanovia UV can help you save on utilities, supplies and maintenance bills whilst treating high volumes of water effectively.

Hotels

Your guests demand an attractive environment to unwind in, with the highest quality water, meaning no odours or cloudiness. Exceed their expectations with Hanovia UV, maintaining the highest standards of hygiene and water quality continuously, and reducing the need to suspend facilities for maintenance.

Hydrotherapy

When you're using pool water in a therapeutic or medicinal way to treat patients whose health may already be compromised, it's more vital than ever to destroy water-borne micro-organisms effectively. Hanovia UV provides peace of mind for you and your clients, so they can enjoy the healthy benefits of treatment in a totally hygienic environment.

Hanovia support and 5-year warranty.

Hanovia systems are designed for long life and reliability, but our commitment to you does not stop when we deliver the system. Hanovia provides global lifetime backup of its products through its world-wide network of offices and distributors, all backed by the technical expertise of the Hanovia Technical Support Centre based in the UK. We also maintain an extensive spares and consumables supply operation ensuring rapid availability of essential parts to keep your system in tip-top operating condition for years to come.

Furthermore all Hanovia systems are backed by an industry-leading 5-year warranty, giving you total peace of mind. Contact us or your local distributor for full details.

Trust Hanovia UV for all your pool needs...

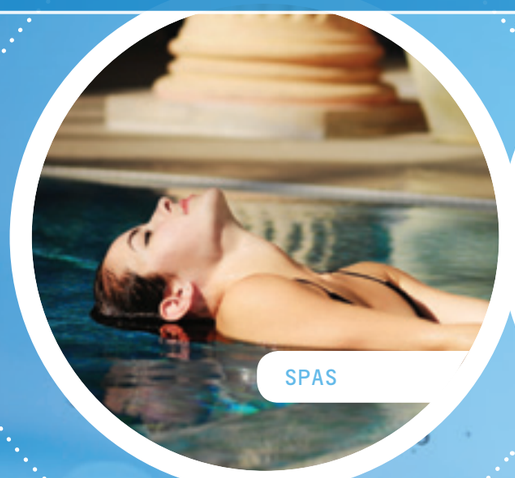

"Since the changeover [from ozone], we are saving at least £4,000 per annum on electricity and almost £4,000 in maintenance costs. Our water bill is also considerably lower as we no longer have to backwash the filter."

STEVE BULL, MAINTENANCE MANAGER, OLYMPIAD LEISURE CENTRE, WILTSHIRE, UK

"Keeping chloramines consistently below the 1 ppm level is nearly impossible without the use of UV, especially when you have a pool that has a very high load and is only 350,000 litres. The Hanovia UV system has been fantastic."

KEITH WEIDNER, STATE SWIM NORWOOD, AUSTRALIA

"On a normal day our six lane, 25 yard pool has a bather load of 360 people, but for eight weeks in the summer this rises to over 750 a day. The Hanovia system has no problem dealing with these loads. It is also virtually maintenance free."

RICHARD SHOULBERG (TRAINER OF OVER 15 OLYMPIC SWIMMERS), GERMANTOWN ACADEMY, PENNSYLVANIA, USA

"With UV, the pool water is much clearer than if we were using chlorine on its own. People often comment on it, and it has even become a bit of a selling point for the pool."

NEIL GALLAGHER, ASSISTANT OPERATIONS MANAGER, COTGRAVE LEISURE CENTRE, NOTTINGHAM, UK

Hanovia

FOOD+BEVERAGE

PHARMACEUTICALS

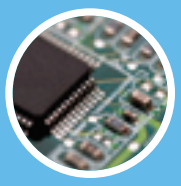
ELECTRONICS

MARINE

AQUACULTURE

POOLS+LEISURE

t: +44 (0) 1753 515 300 e: sales@hanovia.com
Hanovia Ltd, 780 Buckingham Avenue, Slough, Berkshire, SL1 4LA United Kingdom

Visit our website for further information at www.hanovia.com

brochure design by Breathe Marketing Limited www.breathe4u.com

the Hanovia SwimLine product range installation + options

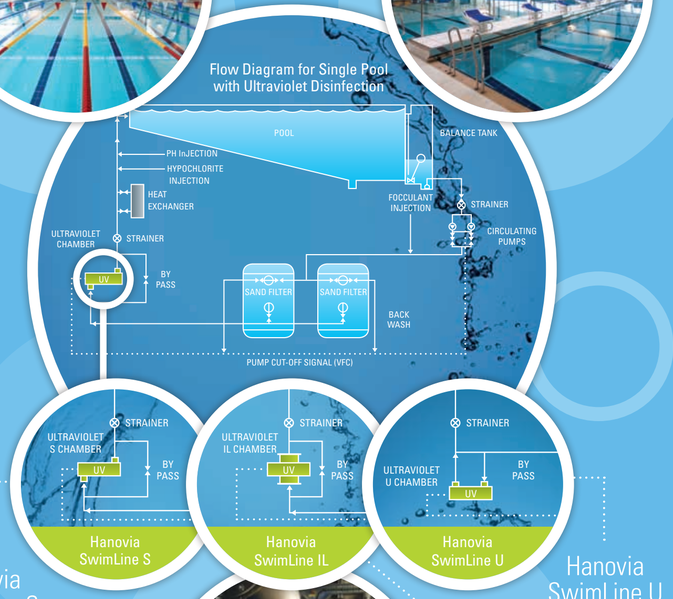

Hanovia SwimLine S

Hanovia SwimLine IL

Hanovia SwimLine U

* Photographs courtesy of Surrey Sports Park

Hanovia

SPAS

COMPETITION

MUNICIPAL

HOTELS

HYDROTHERAPY

t: +44 (0) 1753 515 300 e: sales@hanovia.com
Hanovia Ltd, 780 Buckingham Avenue, Slough, Berkshire, SL1 4LA United Kingdom
Visit our website for further information at www.hanovia.com

brochure design by Breathe Marketing Limited www.breathe4u.com

Hanovia

the power in UV technology

Making light work of pool water treatment

SwimLine

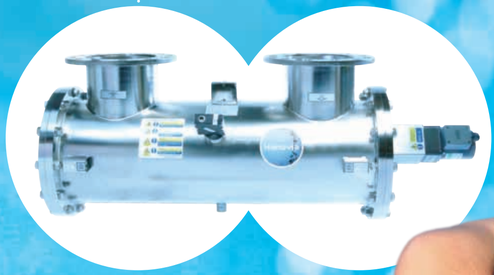

Shouldn't the best system be the simplest?

SwimLine is Hanovia's new and improved generation of UV water treatment systems provided especially for pools. Because it's from Hanovia, it builds on our exceptional lineage of products, chosen by leading pools across the world.

It offers better features than any range we've ever created for the sector. It's now even more efficient, and more environmentally friendly, too. So, whatever kind of pool you have, Hanovia SwimLine was designed to deliver the next level of performance.

What makes it great? Remarkably, it deactivates all known pathogens. Even better, it actually destroys chloramines, so it's the perfect way to improve chlorine-based treatment systems.

And with UV, you can add dramatically less chlorine to the water in your pool. That means less dilution, less waste, and noticeably purer water.

It's an ideal system to use as an add-on, and it's just as good built-in from the start. Giving you cleaner water, without all the effort. And, without so much waste, maintenance, and cost - because Hanovia SwimLine is designed to be as easy as possible to install, operate and maintain.

It's the simplicity that comes from the next level of technology. Beautifully designed, and implemented and supported by our global experts.

Built on engineering excellence

SMART CONTROLS

- Fully microprocessor controlled
- Intuitive menus
- Real-time data displays
- Innovative safety features
- Continuous UV dose display
- Automatic on/off timers
- Energy optimisation

TOTAL TREATMENT CHAMBER

- Reliable - the pinnacle of decades of research
- Tough - with precision stainless steel construction
- Scalable - to any pool and pipework
- Simple - replace UV lamps without stopping flow
- Quality - brilliant design, and helpful features

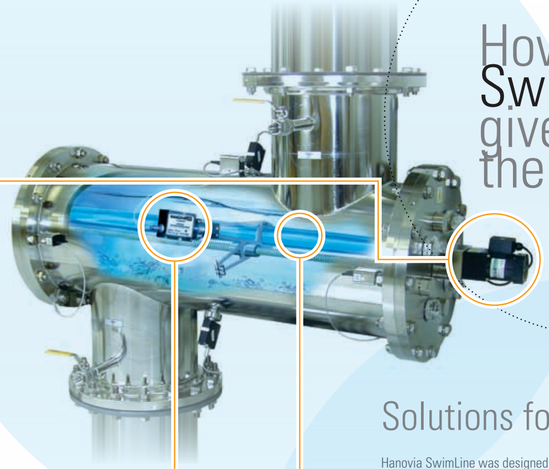

How Hanovia SwimLine gives you the edge

It's simple…

…Hanovia SwimLine, make cleaner, safer water - for less

Swimmers prefer Hanovia UV

Some good ideas simply don't have a downside - like Hanovia SwimLine UV. It's the enhancement your treatment system has been waiting for, creating purer water with less fuss and expense.

- UV leaves no additives, no smell, and no active pathogenss
- Simply a cleaner technology, with water your bathers will love
- Incredibly reliable and safe, with exceptional safety features
- Beautifully simple to use, and remarkably low maintenance
- Safer for swimmers, and the environment
- Lower cost, higher performance through brilliant design
- A brilliant way to improve existing treatment systems

Take a look at our systems, and find out why Hanovia SwimLine's flexible, scalable systems can revolutionise the way you work.

UV LAMP TECHNOLOGY

- Deactivates all known pathogens in one simple step
- Manufactured and tested to meet International Standards
- Specifically engineered to complement the Hanovia SwimLine System
- Broad spectrum UV - deactivating all pathogens
- Uses Hanovia UVlux UV lamps as standard
- Simple to use, maintain and replace

CONTINUOUS MONITORING

- Always on - keeping the system healthy
- Continuous energy optimisation

the Hanovia SwimLine control cabinet

Solutions for every pool

Hanovia SwimLine was designed to be Hanovia's ultimate water treatment system for pools. So, it offers a range of modules that are perfect for every size of pool, and every kind of plant room layout - making Hanovia SwimLine a powerful, flexible way to get the latest technology. From Axial and In-line to U-shaped chambers, Hanovia SwimLine gives you the very best.

Our engineers used the latest computational fluid dynamics technology to model the perfect flows through each component. Rigorous testing ensures high performance and reliability. Automatic wipers make maintenance easier and simpler. And hi-tech sensors and computer interfaces give you unprecedented control over your new set-up.

Re-engineered control programs mean smarter systems. Built-in alarms warn of low UV, power failures or other changes. Smart systems give helpful options. Controls are menu-driven, intuitive and simple. And, you can even operate the systems remotely.

Combined with our international certification, and meeting or exceeding quality standards, Hanovia SwimLine UV gives you more.

the Hanovia SwimLine - S

SwimLine product range + control cabinets

the Hanovia SwimLine - IL

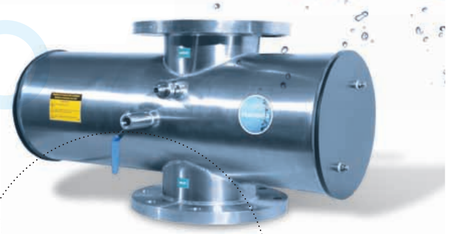

the Hanovia SwimLine - U

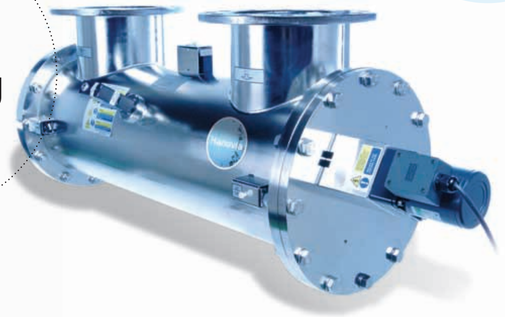

Hanovia

SPAS

COMPETITION

MUNICIPAL

HOTELS

HYDROTHERAPY

t: +44 (0) 1753 515 300 f: +44 (0) 1753 515301 e: sales@hanovia.com
Hanovia Ltd, 780 Buckingham Avenue, Slough, Berkshire, SL1 4LA United Kingdom

Visit our website for further information at www.hanovia.com

910319-0001-04 ©2011 Hanovia Limited / brochure design by Breathe Marketing Limited www.breathe4u.com

Hanovia

SwimLine U

SwimLine S

Technical Specification

Technical Specification

UV Chamber

Material	StSt 316L / 1.4404 pipe electro-polished and passivated
Internal finish	As made, welds as laid
Process (mating) connections	PN16
Degree of protection	IP65 / NEMA 4
Arc tube (lamp)	High purity quartz, med. pressure
Arc tube enclosure	High purity quartz sleeve
Expected lamp life	4,000 to 8,000 hours
Temperature sensor	Yes
UV monitor	Standard (down to min. T10)
Working fluid temperature	+5°C to +60°C
Hydrostatically pressure tested	Yes, to PED requirements
Operating pressure	10 bar
Pressure loss at max. flow	Typically <70 mbar

Cabinet

Material	Epoxy coated carbon steel
Degree of protection	IP54 / NEMA 12
Supply voltages:	Up to 2.5kW 95V to 260V (nominal) 50/60Hz 3.5 to 7.0kW 190V to 500V (nominal) 50/60Hz 7.0 to 14.0kW 300V to 500V (nominal) 50/60Hz
Operating temperature range	+5°C to +40°C
Relative humidity	<90%
Cooling fans	Yes
Cable length (cabinet to chamber)	20m
External contacts	4 – 20mA signals for UV dose or intensity Volt-free contacts for seven status indicators (Local/Remote, System Available, Lamp Ready, System Warning, Common Alarm, Low UV Intensity, ELCB Trip) Accepts Remote Start/Stop from customer equipment

SwimLine U

SwimLine S

Product Specific Data

Features

Operational Features:

- Lamp on/off
- Remote/local operation
- Dose computation from fixed or variable flow
- Selectable auto restart following power failure
- Automatic wiper system
- One timed ON/OFF period per 24 hours
- Dose related four stage power level to arc tubes, with status messages
- Inline strainer
- Drain plus valve

Screen Display Features:

- English language as standard
- UV dose mJ/cm^2
- UV intensity in mW/cm^2 or relative percentage
- Hours run
- Water flow rate
- Chamber surface temperature
- On-line spares listing

Alarm Message Features:

- Low UV
- ELCB trip
- Chamber over temperature
- Lamp fail
- Power supply over temperature

Safety Features:

- Door interlocked cabinet isolator
- Separate door locks
- Earth leakage trip
- Power supply thermal cut-out
- Re-settable circuit breakers for input supply
- Wiper motor overload cut-out

Options

- Autobleed and solenoid valve, with status messages
- Vent and valve
- Bends: 2 x 90°
- Spool piece
- Cable length (chamber to cabinet): 30m or 50m
- Skid mounted systems, pre-wired and tested
- Aggressive water package

  Option 1 for water with 250ppm to 3000ppm chloride <25°C

  Option 2 for water with 3000ppm to 20000ppm chloride <40°C
- Manual Languages: Chinese, French, German, Spanish

Approvals

- Product conforms to:
  EN13445(PED)
  EN50081-1:1992
  EN61000-4-2:1995
  EN61000-4-3:1996
  EN61000-4-5:1995
  EN61000-4-6:1996
  EN61000-4-8:1993
  EN61000-4-11:1994

  following the provisions of the Low Voltage Directive 2006/95/EC and the EMC Directive 2004/108/EEC.
- The product is CE marked.

Additional Information

* The maximum dechloramination capacity is based on pool water with a transmittance T_{10} > 98% and a maximum average UV dose of 60mJ/cm^2, at end of lamp life or inlet hydraulic limit (based on fluid velocity of 3m/s).

All dimensions are approximate for clearance purposes only. Hanovia has a policy of continuous product development, exact drawings are available on request. All specifications are subject to change without notification. Your Distributor or Hanovia Account Manager can advise on correct dosage and specific requirements.

A HALMA COMPANY

Certificate No: FM29365

Dimensions (mm)

SwimLine U:

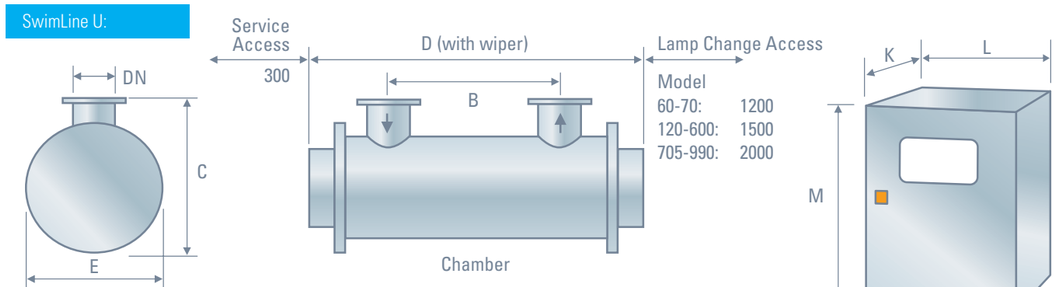

SwimLine S:

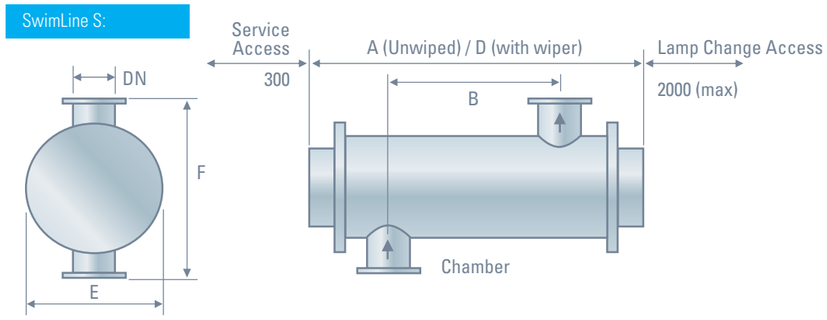

Model	Maximum Dechloramination Capacity * (m^3/hr)	Min. T_{10} (%)	Dimensions A	B	C	D	E	F	DN	K	L	M	Approx Weight (Kg) Chamber (Empty)	Power Supply	Power (KW)
SwimLine 60	60	85	620	240	319	850	240	400	80	365	750	850	45	90	1.2
SwimLine 70	70	85	1090	240	319	850	240	400	100	365	750	850	45	90	1.2
SwimLine 120	120	78	1090	660	319	1300	240	400	150	365	750	850	50	90	2.5
SwimLine 195	195	81	1090	660	319	1300	240	400	150	365	750	850	50	90	3.5
SwimLine 295	295	90	1090	610	420	1300	290	550	200	365	750	850	70	90	3.5
SwimLine 450	450	96	1090	550	505	1300	410	600	250	365	750	850	140	90	3.5
SwimLine 600	600	93	1090	550	505	1300	410	600	250	365	900	1100	140	165	5.5
SwimLine 705	705	93	1600	960	505	1850	410	600	300	365	900	1100	200	165	5.5
SwimLine 990	990	74	1600	930	540	1850	430	650	350	365	1100	1590	320	315	14.0
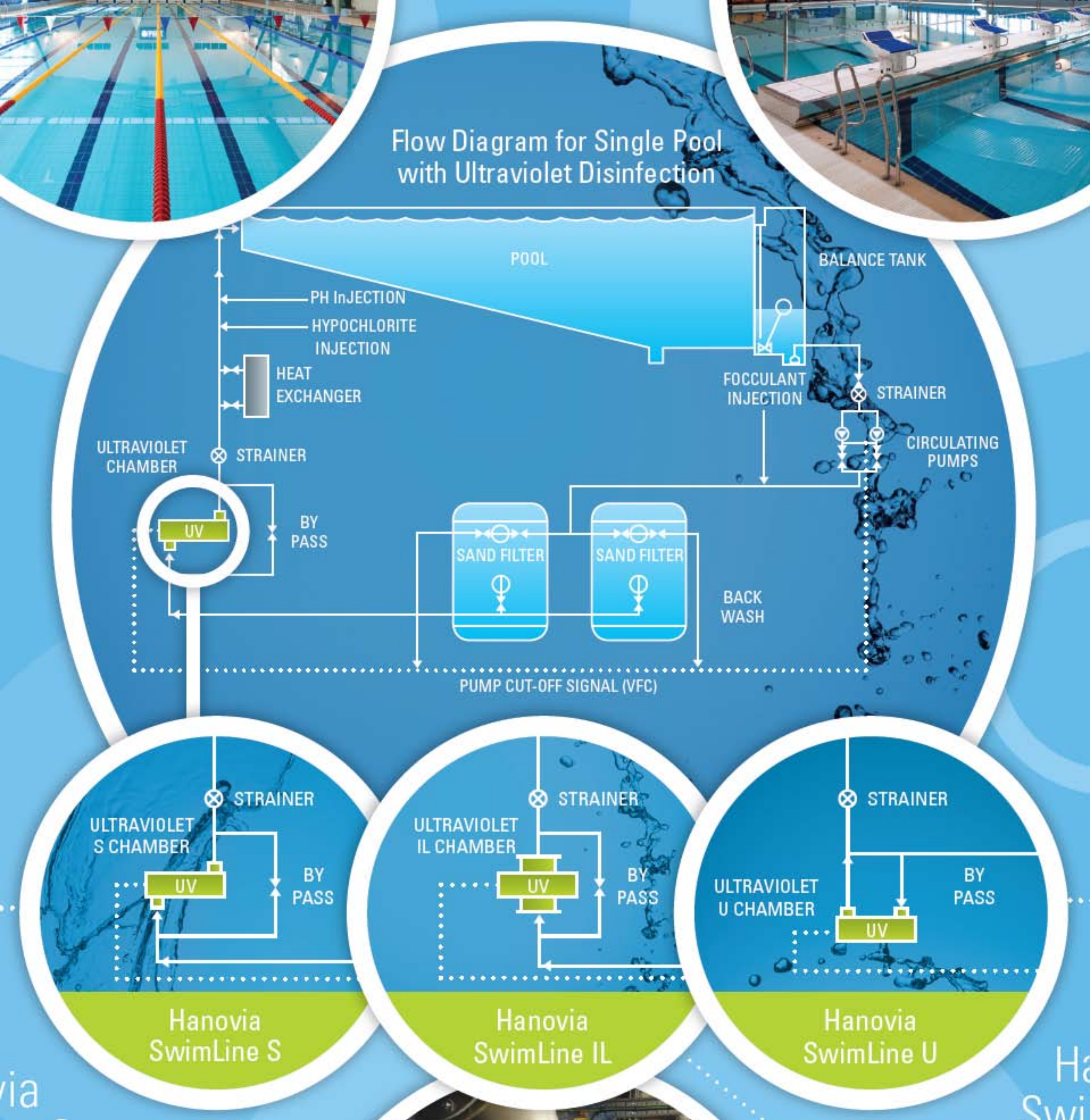
Flow Diagram for Single Pool with Ultraviolet Disinfection