# Resilient Seated Butterfly Valves

## Series 7000/7500

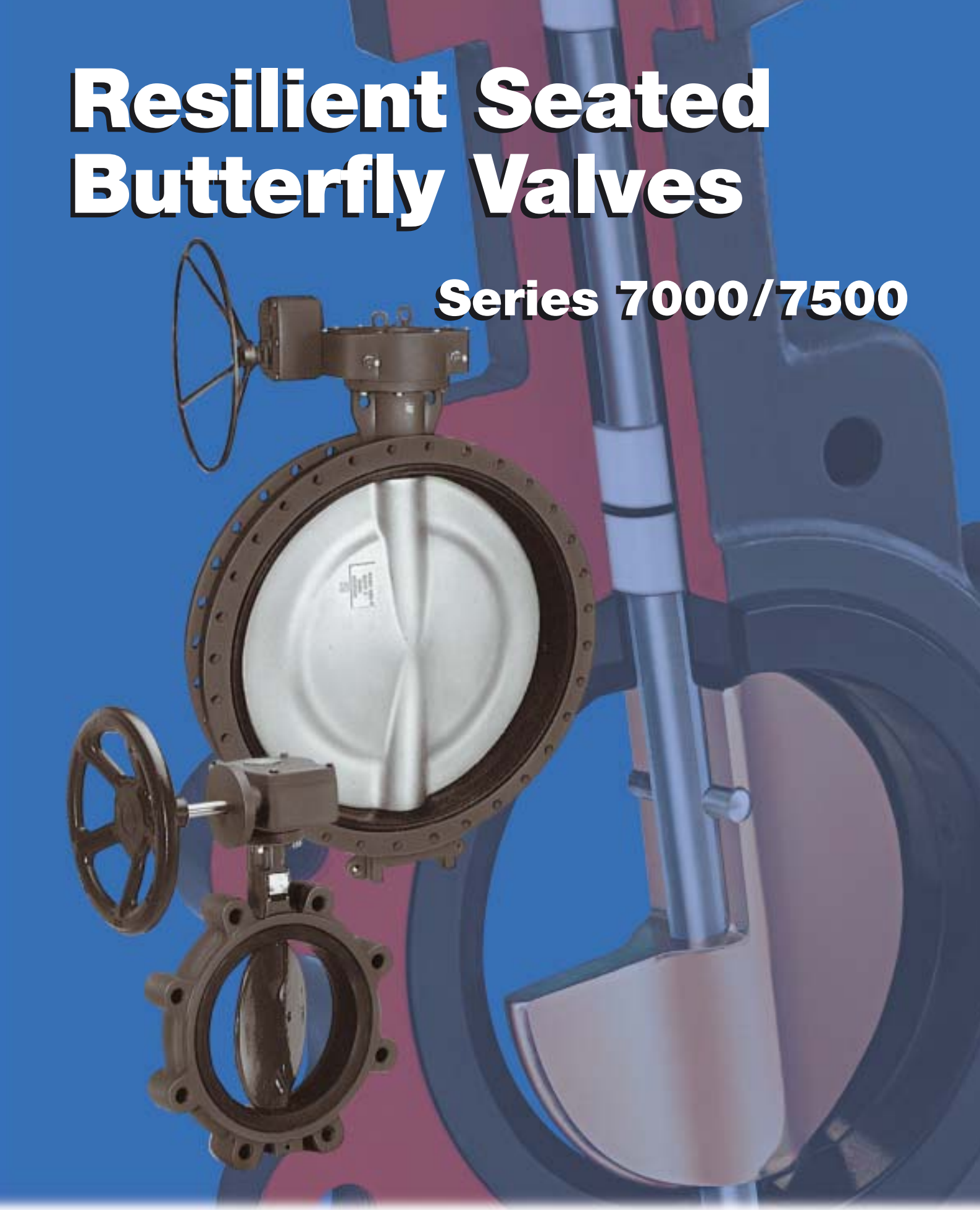

XOMOX *Process Valves & Actuators*

# XOMOX Resilient Seated Butterfly Valves

## Series 7000
### XOMOX Butterfly Valves

Page / Contents


3 Design Features
4 Technical Description
4 Seat Temperature Ratings


## Series 7500
### XOMOX Butterfly Valves for demanding applications

Page / Contents


5 General Description
5 Applications
6 Standard Specifications
6 Characteristics / Features
7 Possible Combinations


These valves have provided years of exceptional, cost-effective service in a wide variety of applications.

© Copyright XOMOX Corporation 2003. All rights reserved. XOMOX® and Tuflin® are registered trademarks of XOMOX Corporation. XOMOX XRP is a trademark of the XOMOX Corporation.

# XOMOX Butterfly Valves - Series 7000

Quality is designed into the Series 7000 butterfly valve, utilizing a phenolic-backed cartridge seat. These valves feature precision-machined parts assuring years of dependable operation. With many body/trim combinations, there is a Series 7000 valve to for your application.

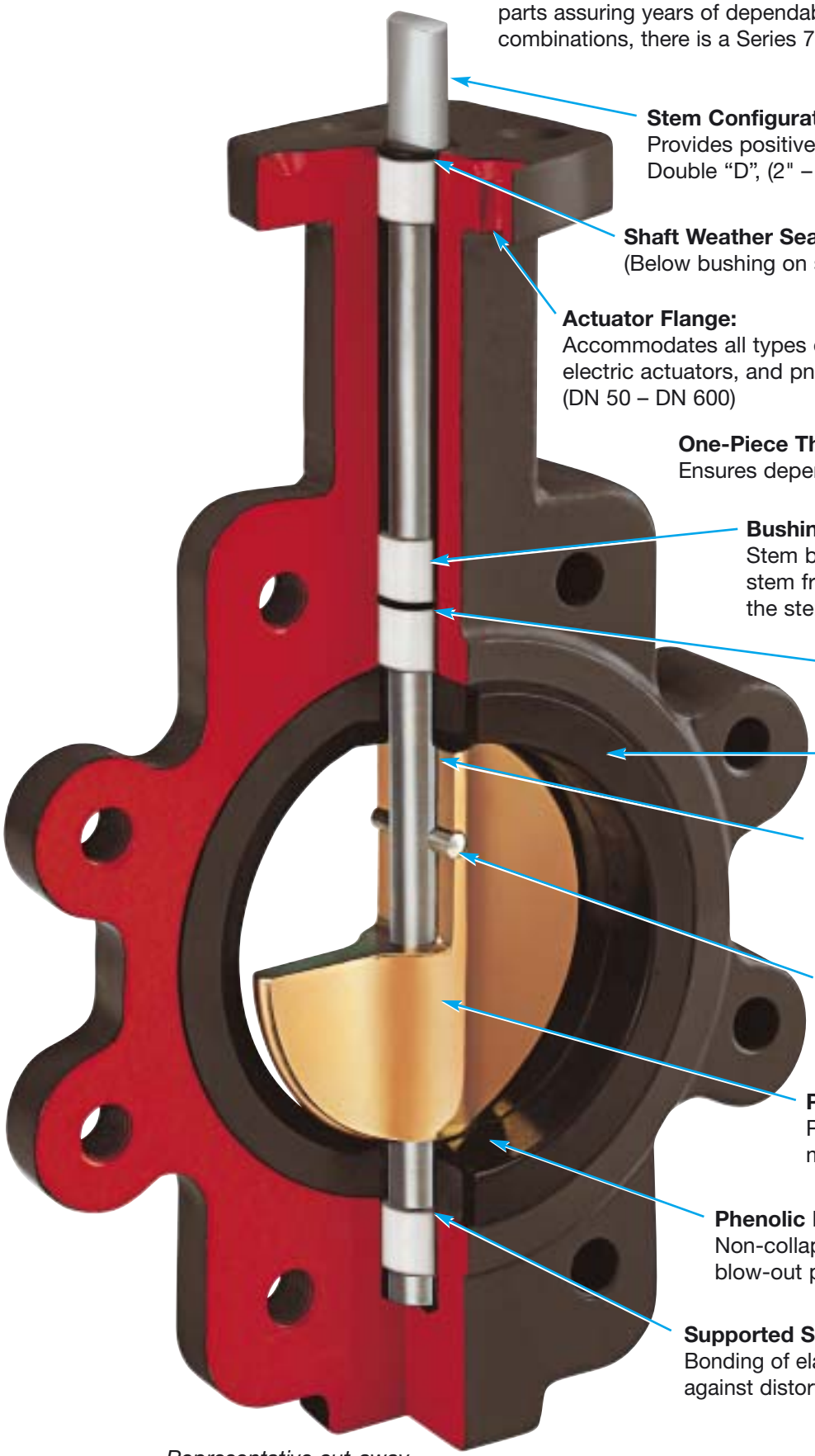

**Stem Configuration:**
Provides positive attachment for handles or actuators. Double “D”, (2" – 24") (DN 50 – DN 600)

**Shaft Weather Seal:**
(Below bushing on some models.)

**Actuator Flange:**
Accommodates all types of actuators: handles, gear operators, electric actuators, and pneumatic actuators. (2" – 24" per ISO 5211) (DN 50 – DN 600)

**One-Piece Thru Shaft:**
Ensures dependability and positive disc positioning.

**Bushings:**
Stem bushing reduces torque and isolates the stem from the valve body, preventing seizure of the stem due to corrosion in the stem journal.

**O-Ring:**
Helps prevent stem leakage.

**Seat Face:**
Negates need for flange gaskets.

**Smooth Finished Disc Flats:**
These “mate” with seat flats to give a highly efficient seal; prevents leakage into shaft areas.

**Precision Taper Pin:**
Ensure positive, vibration proof, shaft-to-disc connection. Field replaceable.

**Precision Profile Disc:**
Provides bubble-tight shut-off and assures minimum torque and longer seat life.

**Phenolic Backed Seat:**
Non-collapsible, stretch resistant, blow-out proof, field replaceable.

**Supported Shaft Seat:**
Bonding of elastomer to phenolic backing ring protects against distortion, a common cause of shaft leakage.

*Representative cut-away*

- **Qualified for both gaseous and liquid service**
- **Positive shutoff, bi-directionally**
- **Phenolic backed cartridge seat**
- **Three-position PTFE bushing - standard**
- **Locking handle - standard**
- **End-of-line service optional**
- **Ease of automation**
- **Field repairable**
- **Complete size range: 2 through 48 inches**

## Typical Applications:

- **Chemical / Petrochemical Processing**
- **Food & Beverage**
- **Power & Utilities**
- **Pulp & Paper**
- **HVAC**

- Available in sizes 2" to 48" (DN 50 – DN 1200).
- Available in Wafer or Lug style body (2" to 30") (DN 50 – DN 750).
- Full flange style body for 36" to 48" valves (DN 900 – DN 1200).
- Wafer body features four alignment holes.
- Pressure ratings for tight shut-off at temperatures up to the maximum limit of the seat material:
  - 2" to 12" - 14 bar (DN 50 – DN 750)
  - 14" to 48" - 10 bar (DN 350 – DN 1200)
- Ideal for on-off or throttling services.
- Available with handles (2" to 12"), manual gear operators (2" to 48"), and electric or pneumatic actuators (2" to 48").
- Refer to XOMOX actuator bulletin for details of pneumatic and electric actuators.
- Designed to comply with MSS SP-67.
- Compatible with ANSI 125/150 flanges.
- Valves 2" to 20" (DN 50 – DN 500) meet the intent and have passed the AWWA C-504-87 Section 5 proof of design tests.
- Type approval certification from ABS for marine applications (2" to 14").
- Bi-directional dead-end capability to 14 bar (2" to 12") and 10 bar (14" to 24") is available.
- For bolting information, consult the XOMOX Installation and Maintenance Manual.

## Seat Temperature Ratings

| Material | Temperature Ratings °C |
|---|---|
| Buna-N | -10 to 80 |
| EPDM | -34 to 120 |
| High Temp. Viton | -10 to 200 |

Although elastomers have an effective operating temperature range, when used in valves, these ranges may have to be modified. The temperature ranges shown in the table have been adjusted accordingly.

**For High Temperature:** When using High Temperature Viton, the operating pressure of the valve is reduced above 120°C.

## *Series 7500 - XOMOX Butterfly Valves*

- XOMOX Series 7500 Butterfly Valves are used in demanding service applications.
- XOMOX Series 7500 Butterfly Valves are reliable, low maintenance shut-off and control valves.
- Designed for use in gas and liquid pipelines, to a maximum working pressure of 16 bar.
- Suitable for vacuum service
- Blow-out proof stem
- Equipped to handle an operating temperature range of -34°C to 150°C.
- An economical alternative to plug, gate, and ball valves.

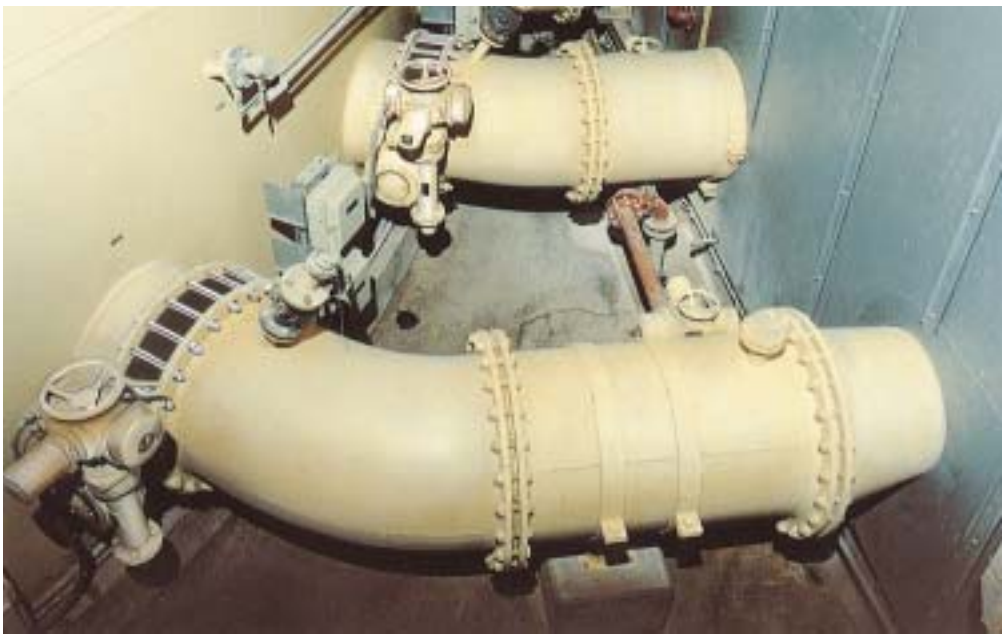

XOMOX Series 7500 Butterfly Valves are extremely adaptable and have numerous application possibilities:

- Water treatment
- Chemical industry
- Waste effluent treatment
- Paper industry
- Sugar processing
- Construction
- Drilling / Production
- HVAC
- Cooling water circulation
- Pneumatic conveyors
- Compressed air
- Gas plants
- Desulpherization

## Standard Specifications

- ISO 9001
- DVGW Gas approval
- Pipe diameters NPS 1½ – 48, (ND 40 – 1200).
- Pressure range PN 6, 10, 16, ANSI Class 150.
- Temperature range -34°C to 150°C.
- Face-to-face dimensions according to APi 609 and ISO 5752 Series 20,
- EN 558-1 Series 20
- Neck flange according to ISO 5211.
- Bubble tight shut-off ANSI Class VI or better.
- Tightness acc. to DIN 3230-T3, Leakrate 1
- Shaft connection NPS 2 – 12 (DN 50 – 300), acc. to DIN 3337

## Corrosion Free

- The body lining and disc are the only components of the valve that come into contact with the line medium. These components come in a wide variety of materials which resist degradation from the majority of line media.

## Permanently Tight Closure

- XOMOX Series 7500 Butterfly Valves close liquid and gas tight in both flow directions.
- The disc is pressed with a defined constant compression over the entire disc circumference, into the elastic body lining. The power transmission between disc and spindle is effected via a square drive and provides for an axial movement and self centering of the disc, which prevents overstress and wear of the elastomer.

## Suitable for Vacuum Service

- The replaceable body lining consists of a firm back-up ring onto which the elastic seating material is vulcanized, thus creating stability of the seat which prevents deformation of the elastomer during closing.
- The bond between elastomer and back-up ring is strong enough to enable the valve to be used with high flow rates and for vacuum service.

## Basic construction

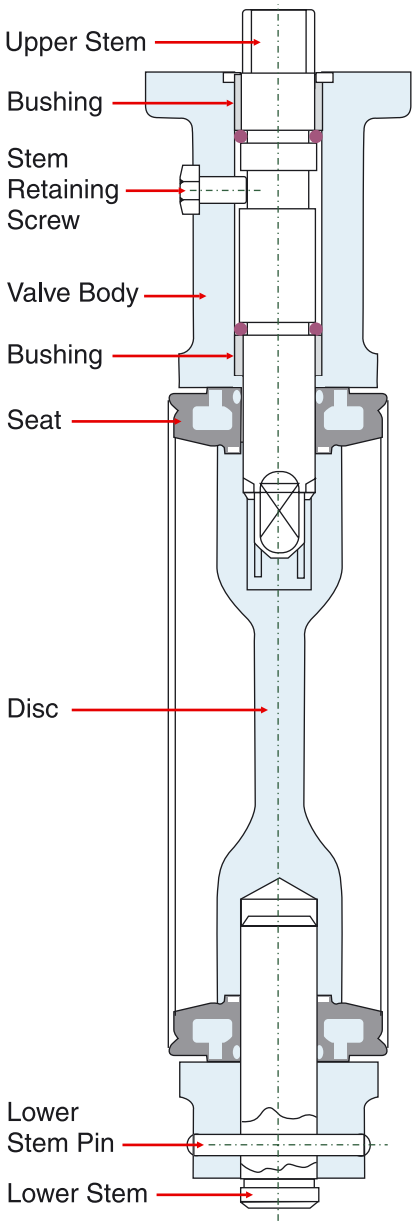

## Possible Combinations

| Body type | Material | DN 40 – 300<br>NPS 1½ – 12 | DN 350 – 600<br>NPS 14 – 24 | DN 700 – 900<br>NPS 28 – 36 | DN 1000 – 1200<br>NPS 40 – 48 |
|---|---|---|---|---|---|
| Wafer body | GG 25<br>GGG 40<br>GGG 40.3 | PN 6/10/16/ANSI 150<br>PN 10/16/ANSI 150<br>PN 10/16 | <br>PN 10/16/ANSI 150<br>PN 10/16 | <br><br>PN 10/16 | –<br>–<br>– |
| Lug body | GGG 40<br>GGG 40.3<br>GS-C25 | PN 10/16/ANSI 150<br>PN 10/16<br>PN 10/16/ANSI 150 | PN 10/16/ANSI 150<br>PN 10/16<br>PN 10/16/ANSI 150 | PN 16/MSS-SP44<br>PN 16<br>PN 16/MSS-SP44 | –<br>–<br>– |
| Wafer body with cenering lugs | GG 25 | PN 6/10/16/ANSI 150 | – | | – |
| Flanged body | GGG 40<br><br>GGG 40.3<br>GS-C25 | –<br><br>–<br>– | –<br><br>–<br>– | PN 10<br><br>PN 10<br>PN 10 | PN 10/16<br>MSS-SP 44<br>PN 10/16<br>PN 10/16 |

| Component | Version | DN / NPS | Material |
|---|---|---|---|
| Betätigung | Position lever<br>Position lever cocktable<br>Square, double D<br>Gear operator<br>pneum. actuator<br>hydr. actuator<br>elekt. actuator | 40 – 300 / 1½ – 12<br><br>40 – 200 / 1½ – 8<br>40 – 200 / 1½ – 8<br>40 – 1200 / 1½ – 48<br>40 – 1200 / 1½ – 48<br>40 – 1200 / 1½ – 48<br>40 – 1200 / 1½ – 48 | -<br><br>-<br>-<br>-<br>-<br>-<br>- |
| Upper stem | | 40 – 1200 / 1½ – 48<br>40 – 1200 / 1½ – 48 | Stainless Steel ASTM A 477<br>Stainless Steel ASTM A 479 |
| Seat | | 40 – 1200 / 1½ – 48<br>40 – 500 / 1½ – 20<br>40 – 1200 / 1½ – 48<br>40 – 1200 / 1½ – 48<br>40 – 600 / 1½ – 24<br>40 – 1200 / 1½ – 48 | NBR<br>HNBR<br>EPDM<br>FPM<br>CSM<br>EPDM-H |
| Disc | | 200 – 1200 / 8 – 48<br>40 – 1200 / 1½ – 48<br>40 – 700 / 1½ – 28<br>200 – 1200 / 8 – 48<br>40 – 1200 / 1½ – 48<br>40 – 600 / 1½ – 24<br>700 – 1200 / 28 – 48<br>40 – 150 / 1½ – 6<br>40 – 1200 / 1½ – 48<br>40 – 700 / 1½ – 28 | DI nickel plated [4]<br>Stainless Steel CF8M<br>Aluminium Bronze<br>DI coated [1) 4)]<br>DI coated [1)]<br>Hastelloy-C [1) 5)]<br>Hastelloy-C22C<br>Stainless Steel polished<br>Duplex 9.4517 [1) 2)]<br>Gur lined |
| Lower stem | | 40 – 1200 / 1½ – 48<br>40 – 700 / 1½ – 28 | Stainless Steel A 477<br>Stainless Steel A 479 |

1) only for max. 10 bar shut off
2) only on request
3) DN 40 / NPS 1½ only wafer body, not in PN 6 and ANSI Cl. 150
4) alternatively in stainless steel
5) or equivalent

**REGOM INSTRUMENTS s.r.o.**
**Brabcova 1159 / 2**
**147 00 Praha 4**
**CZECH REPUBLIC**

**Tel:** **+420 241 402 206**
**Fax:** **+420 241 400 290**
**Mail:** **regom@regom.cz**
**Skype:** **regom-office**

**www.regom.cz**