XOMOX®

brands you trust.

Matryx® Vane Actuators

CRANE

ChemPharma Flow Solutions

www.cranechempharma.com

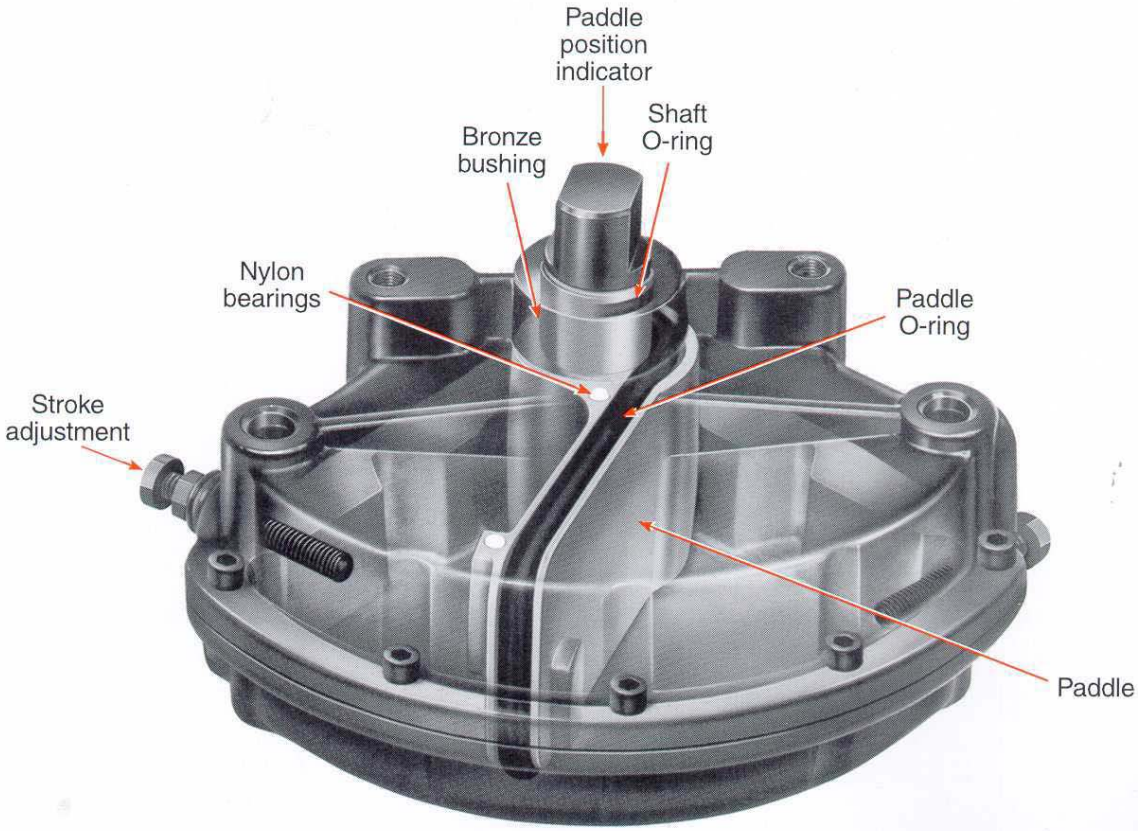

Matryx® Vane Actuators provide unmatched features:

Compact, lightweight, yet powerful.
Matryx Vane Actuators are smaller than other types of actuators in the torque output range of up to 36,000 in-lb. Matryx Vane Actuators produce a high ratio of torque output per pound of actuator weight.

Long life.
Exhaustive factory tests and customer applications have substantiated the long life of Matryx vane actuators.

Durable housing.
The housing is die cast aluminum for maximum strength. The housing is then coated with a high quality alkyd enamel for excellent atmospheric corrosion resistance.

Modular construction.
Accessory control components can be easily added in the field.

Ease of installation.
Matryx vanes are easy to install because of their lightweight, compact design. Mounting kits are available for all types of valves and other devices.

Wide temperature range.
Matryx vanes can operate efficiently from 0° to 225°F. Contact the factory for applications in other temperature ranges.

Simplicity.
Only one moving part, the vane (paddle), is needed to transmit the torque to the valve. Because the paddle is cast directly on the shaft, there is no lost motion during the stroke. This design provides excellent repeatability when used with a positioner.

Uniform seal.
The paddle comes assembled with integral nylon bearings to equalize O-ring compression around the paddle.

Low friction.
The Matryx vanes use Buna-N (Nitrile) O-rings and bronze bushings to minimize friction. The result is a design which is more than 90% efficient in torque output.

Low maintenance.
There are only 3 soft parts which can wear during operation - 1 paddle O-ring and 2 shaft O-rings. These O-rings are easily replaced and are readily available from the factory and all automation centers.

External stroke adjustment.
The Matryx vanes are designed with convenient external travel stops to allow a wide range of rotation adjustment (+/-10 at each end of the stroke).

Available special features.
See page 9 for a description of the options currently available.

© Copyright Xomox Corporation 1979, 2005
All rights reserved. Tufline®, Matryx®, and Xomox® are registered trademarks of the Xomox Corporation
XRP™ is a trademark of Xomox Corporation.

Operating Torques For Double Acting Vane Actuation*

inch-lbs (nm)

MODEL	40 psi (2.7 bar)	60 psi (4.1 bar)	80 psi (5.5 bar)	100 psi (6.8 bar)	120 psi (8.2 bar)
MX60	210	315	450	560	680
	(24)	(36)	(51)	(63)	(77)
MX200	680	1050	1450	1850	2200
	(77)	(119)	(164)	(209)	(249)
MX450	1800	2700	3600	4500	5400
	(203)	(305)	(407)	(508)	(610)
MX750	2660	4100	5325	6900	8350
	(300)	(463)	(602)	(780)	(943)
MX1250	4730	7120	9350	11750	14250
	(534)	(804)	(1056)	(1328)	(1610)
MX3000	12000	18000	24000	30000	36000
	(1356)	(2034)	(2712)	(3389)	(4067)

Operating Torques For 90° Fail-Safe Vane Actuation *

inch-lbs (nm)

MODEL	Position	40 psi (2.7 bar)	60 psi (4.1 bar)	80 psi (5.5 bar)	100 psi (6.8 bar)	120 psi (8.2 bar)
MX60FS	OPEN	210	315	450	560	680
		(24)	(36)	(51)	(63)	(77)
	CLOSE *Beginning*	200	288	412	514	624
		(22)	(33)	(47)	(58)	(71)
	CLOSE *End*	*120*	*175*	*255*	*325*	*400*
		(13)	*(20)*	*(29)*	*(37)*	*(45)*
MX200FS	OPEN	680	1050	1450	1850	2200
		(77)	(119)	(164)	(209)	(249)
	CLOSE *Beginning*	623	960	1330	1700	2000
		(70)	(108)	(150)	(192)	(226)
	CLOSE *End*	*382*	*565*	*815*	*1065*	*1285*
		(43)	*(64)*	*(92)*	*(120)*	*(145)*
MX450FS	OPEN	1800	2700	3600	4500	5400
		(203)	(305)	(407)	(508)	(610)
	CLOSE *Beginning*	1571	2510	3350	4200	5020
		(178)	(283)	(378)	(475)	(567)
	CLOSE *End*	*1181*	*1890*	*2520*	*3150*	*3780*
		(134)	*(214)*	*(285)*	*(356)*	*(427)*
MX750FS	OPEN	2660	4100	5325	6900	8350
		(300)	(463)	(602)	(780)	(943)
	CLOSE *Beginning*	2401	3950	5120	6650	8050
		(272)	(446)	(578)	(750)	(910)
	CLOSE *End*	*1700*	*2725*	*3625*	*4765*	*5820*
		(193)	*(308)*	*(410)*	*(538)*	*(658)*
MX1250FS	OPEN	4730	7120	9350	11750	14250
		(534)	(804)	(1056)	(1328)	(1610)
	CLOSE *Beginning*	4220	6850	9000	11300	13700
		(479)	(774)	(1017)	(1276)	(1548)
	CLOSE *End*	*2710*	*4260*	*5780*	*7400*	*9090*
		(308)	*(481)*	*(653)*	*(836)*	*(1027)*
MX3000FS	OPEN	12000	18000	24000	30000	36000
		(1356)	(2034)	(2712)	(3389)	(4067)
	CLOSE *Beginning*	10000	16500	22000	27500	33000
		(1136)	(1860)	(2480)	(3100)	(3729)
	CLOSE *End*	*6000*	*12000*	*16000*	*20000*	*24000*
		(681)	*(1350)*	*(1800)*	*(2250)*	*(2712)*

* Actuator Sizing:

When sizing an actuator to a valve, damper, or other device, a safety factor should be added to the maximum torque requirement of the device to assure the automated device's operation.

For Double Acting Vane Actuators, the safety factor should be 10%.

For Fail-Safe Vane Actuators, the safety factor should be 20%.

Dimensional Data for Double Acting Vanes

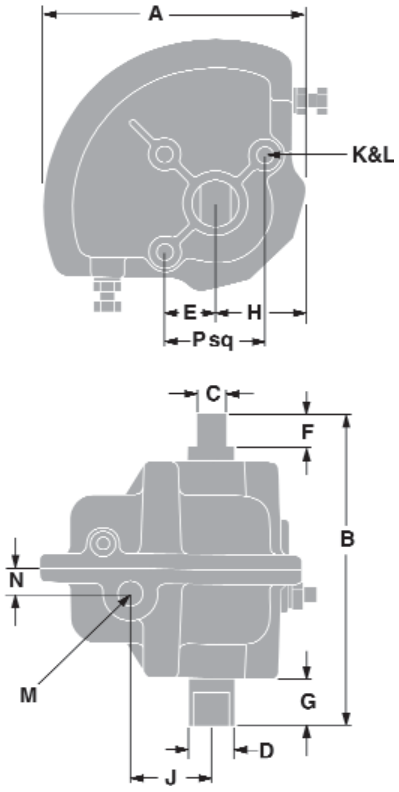

Model MX60

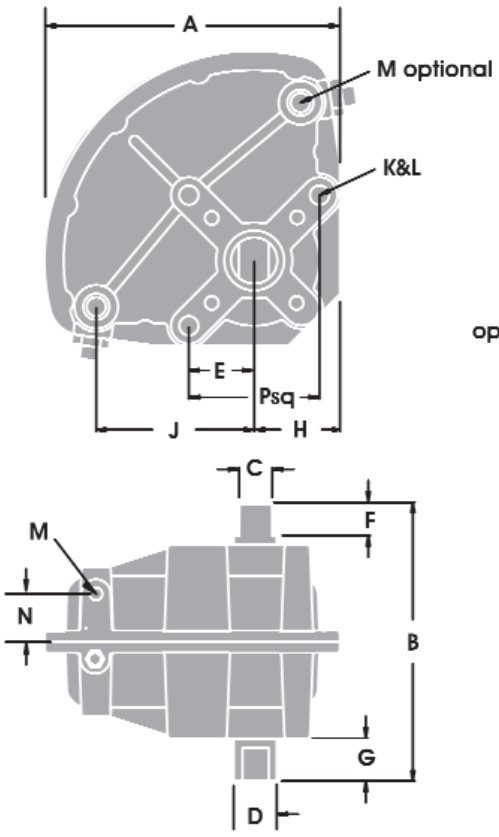

Model MX200

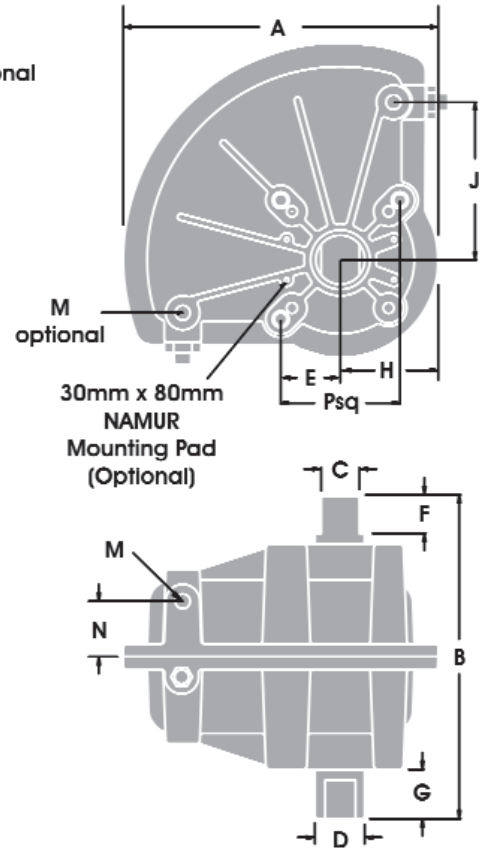

Model MX450

LEGEND

Standard letter designations for double acting vane actuators

A	overall length
B	total height
C	shaft end flats dimension
D	shaft end diameter
E	center line of vane shaft to center line of mounting holes
F	depth of shaft end flats
G	length of the shaft from mounting surface to the end of the shaft
H	center line of vane shaft to right end of vane
J	center line of vane shaft to port center line
K	vane mounting holes dimensions and quantity
L	vane mounting hole depth of thread
M	port size. Alternative port locations available upon request for models MX200, MX450, and MX3000
N	center line of assembled vane to port center line
O	center line of vane shaft to port center line
P	vane mounting holes arrangement
R	accessory mounting hole arrangement
S	center line of vane shaft to center line of accessory mounting hole
T	accessory mounting hole dimension and quantity
U	accessory mounting hole depth of thread

Note: Vane shown in full clockwise position when viewed from top of vane.

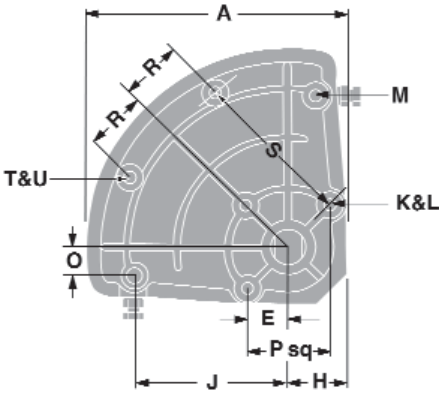

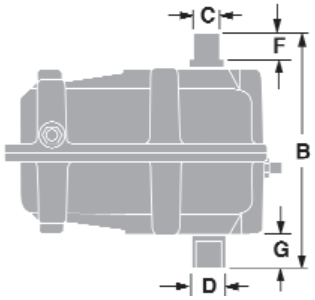

Model MX1250

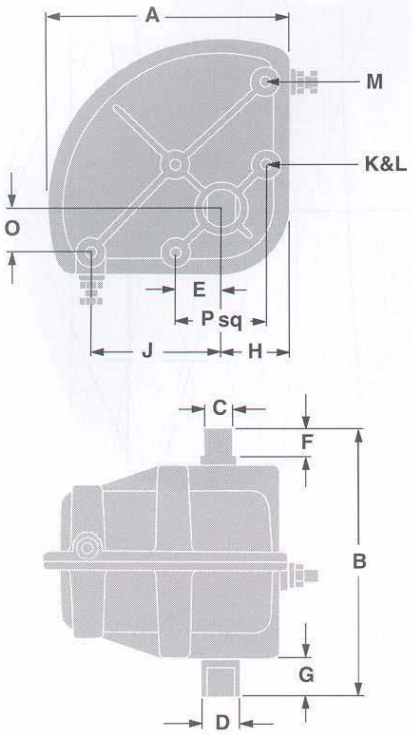

Model MX750

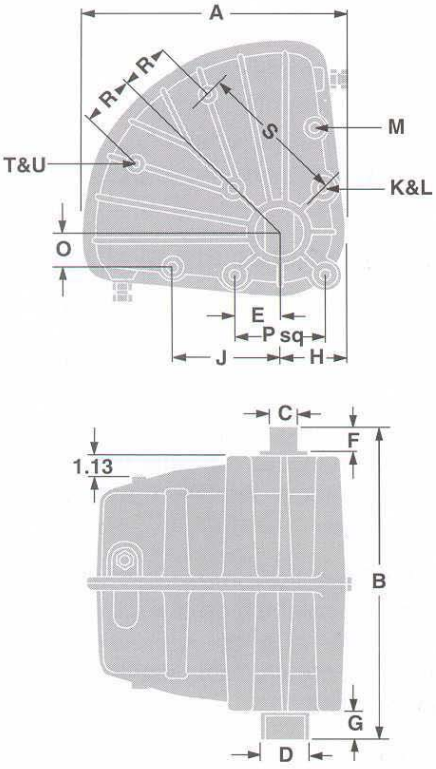

Model MX3000

DIMENSIONS inches (mm)

Models	MX60	MX200	MX450	MX750	MX1250	MX3000
A	4.87	6.94	9.25	9.31	10.88	13.62
	(124)	(176)	(235)	(236)	(276)	(346)
B	5.88	6.56	9.56	10.50	10.00	16.63
	(149)	(166)	(243)	(267)	(254)	(422)
C *	.563	.750	1.124	1.125	1.125	1.500
	(14.3)	(19.0)	(28.6)	(28.6)	(28.6)	(38.1)
D *	.875	1.064	1.437	1.442	1.442	2.495
	(22.2)	(27.0)	(36.5)	(36.6)	(36.6)	(63.4)
E	.94	1.50	1.75	1.75	1.75	2.30
	(24)	(38)	(44)	(44)	(44)	(58)
F *	.63	.75	1.13	1.13	1.13	1.31
	(16)	(19)	(29)	(29)	(29)	(33)
G *	.91	1.00	1.50	1.50	1.50	1.56
	(23)	(25)	(38)	(38)	(38)	(39)
H	1.69	2.13	2.88	2.63	2.50	3.46
	(43)	(54)	(74)	(67)	(63)	(88)
J	1.50	3.62	4.63	5.00	6.38	5.50
	(38)	(92)	(118)	(127)	(162)	(140)
K * [UNC]	5/16-18	3/8-16	1/2-13	1/2-13	1/2-13	3/4-10
qty	3	3	3	3	3	4
L *	.50	.56	.81	.75	.62	1.50
	(13)	(14)	(21)	(19)	(16)	(38)
M * [NPT]	1/4-18	1/4-18	1/4-18	1/4-18	3/8-18	3/8-18
qty	2	4	4	4	4	4
N	.50	.94	1.63	-----	-----	-----
	(13)	(24)	(41)	-----	-----	-----
O	-----	-----	-----	1.75	1.19	1.88
	-----	-----	-----	(44)	(30)	(48)
P *	1.88	3.00	3.50	3.50	3.50	4.60
	(48)	(76)	(89)	(89)	(89)	(117)
R *	-----	-----	-----	-----	2.50	2.63
	-----	-----	-----	-----	(63)	(67)
S *	-----	-----	-----	-----	6.63	7.69
	-----	-----	-----	-----	(168)	(195)
T * [UNC]	-----	-----	-----	-----	1/2-13	1/2-13
qty	-----	-----	-----	-----	2	2
U *	-----	-----	-----	-----	.62	.56
	-----	-----	-----	-----	(16)	(14)

* Typical on both top and bottom of actuator

WEIGHTS

lbs	3	7	14	18	22	65
kg	(1.4)	(3.2)	(6.4)	(8.2)	(10.0)	(29.6)

Fail-Safe Vane Actuators

Matryx Fail-Safe Vane Actuators utilize an air accumulator to assure valve closure, regardless of air pressure droop (temporary low air pressure). The accumulator design makes Matryx vanes 100% positively fail-safe because they will fail instantaneously when air pressure is lost or falls below a predetermined minimum air setting. The Matryx pneumatic Fail-Safe systems have been field tested and proven reliable under a variety of service conditions.

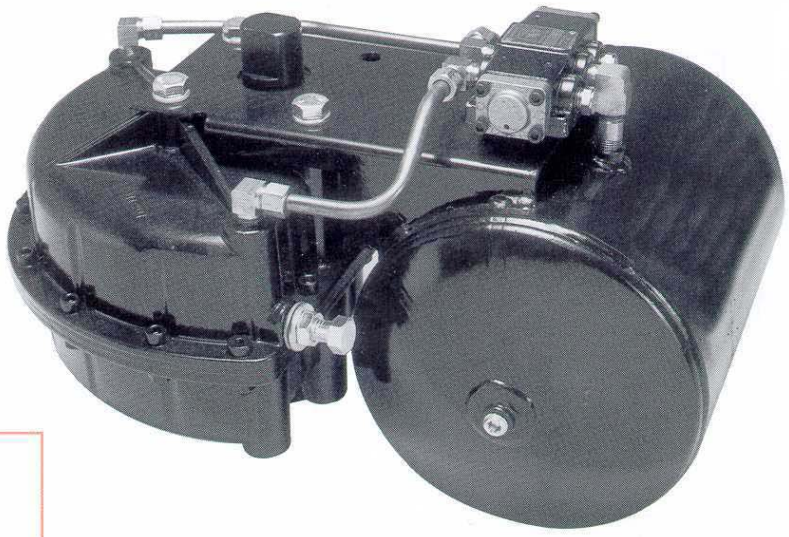

Fail-Safe Arrangement 1* (FS1)

(Fail-Safe on ***air*** failure)

As air (above 45 psig) is admitted to the 4-way air operated pilot valve, it switches, and air moves the vane 90° and also charges the accumulator. When air drops below 15 psig, the pilot switches, allowing accumulator air to move the vane 90° to the "safe" position.

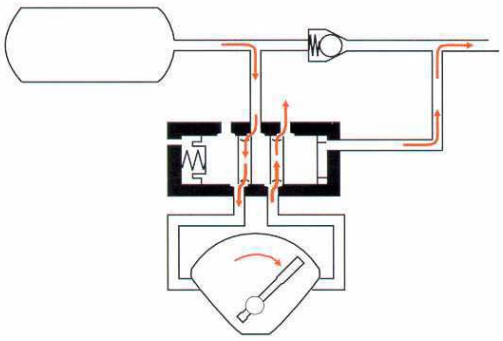

Fail-Safe Arrangement 2* (FS2)

(Fail-Safe on ***air or electric*** failure)

This is identical to Arrangement 1 except that a 3-way solenoid valve** controls air supply to pilot valve. On loss of air pressure, the pilot switches to the "safe" position. On electrical failure, the solenoid de-energizes, exhausting the air from the pilot valve. Explosion-proof is available.

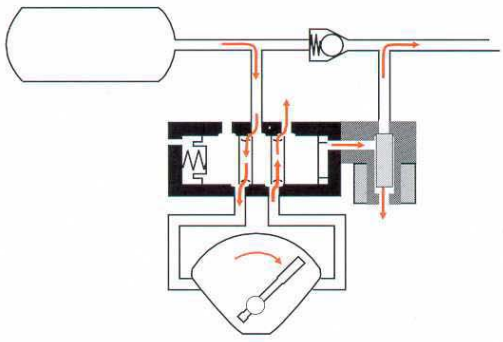

**Solenoid valve may be integral as shown or separate from pilot valve.

FEATURES

- No spring drift. No change in position with the normal droop in plant air supply pressure. Spring actuators "drift" as the air supply droops.
- Cost savings. In some cases, the Matryx system is less than half the cost of a comparable spring return unit.
- Remote mounting capability. The Matryx Fail-Safe system can easily be mounted remotely on a nearby wall or structural support.
- A safer system. No special tools or safety enclosures are needed for maintenance, like some spring actuators. For safe, easy maintenance, the tank is simply depressurized.

*Other Fail-Safe arrangements are available.

Fail-Safe arrangement 3 will function on ***air or electric*** failure (like the FS2) but also incorporates a pressure switch to monitor the air supply. If pressure drops below the pressure switch setting, the switch opens and the solenoid is de-energized, switching to the "safe" position. Accumulator air then moves the vane 90°, pressure switch resets 10 psi above the failure setting, and normal operation resumes.

Fail-Safe arrangement 4 will function on ***electric*** failure only. On electrical failure, the solenoid de-energizes and moves the actuator to the "safe" position. If there could be air failure with no effect on the electrical service, this arrangement should not be used.

Consult the factory for questions regarding your specific application.

Fail-Safe (FS) Vane Dimensions

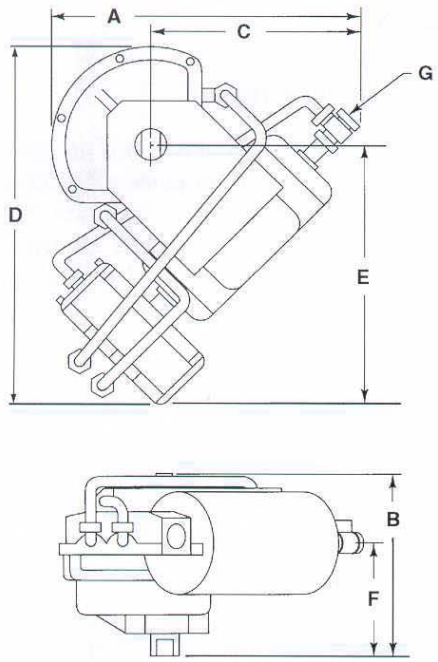

MX60FS

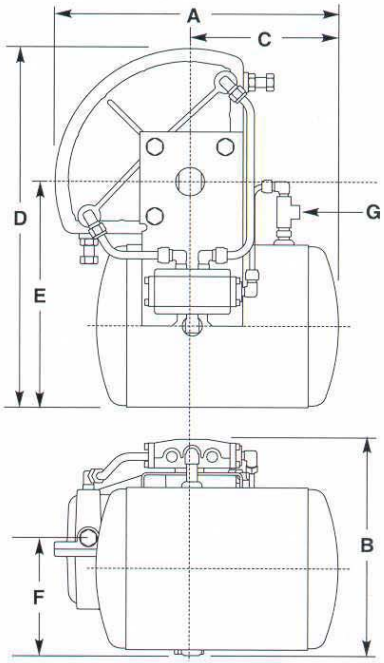

MX200FS - MX3000FS

90° Matryx Fail-Safe Actuator Dimensions inches (mm)

Model	A	B	C	D	E	F	G [NPT]	Tank Volumes* Cu.In.
MX60FS	8.94 (227)	5.88 (149)	5.69 (115)	11.18 (284)	8.00 (203)	3.50 (89)	1/4-18 1/4-18	40
MX200FS	11.75 (298)	7.63 (194)	6.88 (175)	13.63 (347)	8.81 (224)	3.63 (92)	1/4-18 1/4-18	95
MX450FS	14.69 (373)	9.93 (245)	8.00 (203)	16.88 (429)	10.50 (267)	4.38 (111)	1/4-18 1/4-18	302
MX750FS	14.75 (375)	10.50 (267)	8.00 (203)	18.68 (475)	12.00 (305)	4.25 (108)	1/4-18 1/4-18	542
MX1250FS	21.00 (534)	10.88 (276)	12.50 (318)	20.38 (518)	12.00 (305)	3.75 (95)	1/4-18 1/4-18	634
MX3000FS	22.38 (568)	16.68 (424)	10.13 (257)	26.18 (665)	16.00 (406)	8.38 (213)	1/4-18 1/4-18	1963

The dimensions above are for Fail-Safe Arrangement 1 models. Contact factory for other arrangements.
*Tank volume represents enough capacity to stroke the actuator 1 time at listed torque.

Weights *

Model	MX60FS1	MX200FS1	MX450FS1	MX750FS1	MX1250FS1	MX3000FS1
lbs	18	24	28	37	40	102
kg	(8)	(11)	(13)	(17)	(18)	(47)

*For FS Arrangement 2 units, add 1 lb. to the weights shown for FS1 models.

180° Matryx Vane Actuators

Models MX60-180 through MX3000-180.

Matryx 180° actuator systems make use of two 90° actuators and two solenoid valves to eliminate the need for a positioner or elaborate limit switch setup to control stopping at the 90° position. The output torques of the 180° actuators are the same as the 90° units. Available in weatherproof or explosion proof construction.

180° systems can also be supplied as fail-safe units. Fail-safe versions can be constructed to fail in any of the 3 positions shown; however, position 2 (90°) is the standard fail position.

Position 1 (0°)

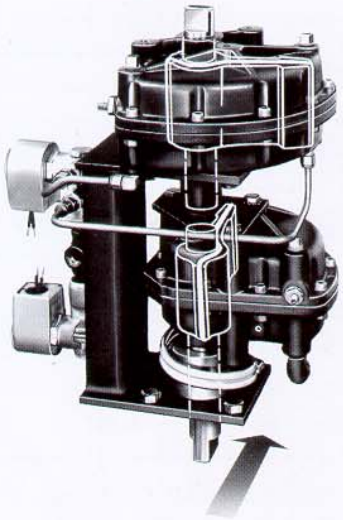

Position 2 (90°)

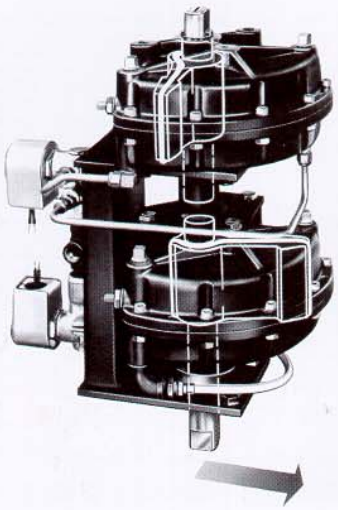

Position 3 (180°)

Operation:

Three position control is obtained by the use of two 4-way solenoid valves.

To obtain position 1 (full counterclockwise), the top solenoid is energized. To obtain position 2 (center), neither solenoid is energized. For position 3 (full clockwise), the bottom solenoid is energized.

180° movement is obtained by adding the 90° stroke of both actuators. The upper unit rotates the housing of the lower unit 90°. The vane of the lower unit then rotates 90° within its housing, so the result is 180°.

Chemical resistant plastic tubing provides flexible air connection to the lower actuator.

Options & Direct Mount Configuration

Optional Materials & Applications

Matryx Vanes can be supplied with special materials to meet your application requirements. Some examples include:

- ***Extended travel stop screws***
- ***Custom exterior coatings***
- ***PTFE interior coatings***
- ***High or low temperature trim***
- ***Special greases***
- ***Hydraulic units***

Contact the factory to discuss special applications.

Direct Mount Vane Actuators

Direct mounting offers a number of benefits:

- ***Eliminates costly brackets and couplings.***
- ***Speeds the assembly to valves.***
- ***Reduces the height of valve assemblies.***
- ***Eliminates lost motion due to worn couplings.***

Direct mountable Matryx Vane Actuators can be supplied in a variety of socket styles including: double D, square, rectangular, and keyed. Custom shapes can also be provided (refer to the schematic below for design parameters). Direct mount sockets can be provided on one or both ends of the actuator shaft.

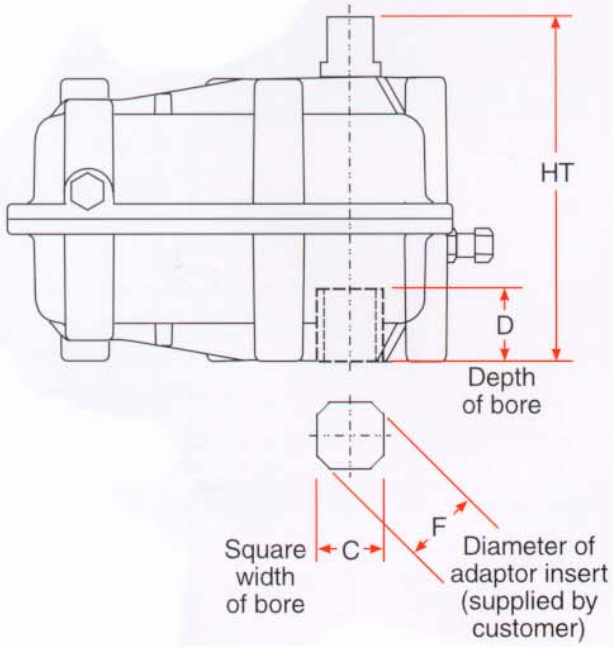

Dimensions for Direct Mounted Vanes inches

Model	C	D	F	HT
MX60DM	.506/.503	1.00	.545	4.97
MX200DM	.632/.628	1.25	.826 MAX	5.56
MX450DM	.882/.878	1.50	1.000	8.13
MX750DM	.882/.878	1.50	1.000	9.00
MX1250DM	1.004/1.000	1.75	1.190	8.50
MX3000DM	1.630/1.625	2.00	2.093/2.000	15.08

Performance Characteristics & Materials Of Construction

Performance Characteristics

Pressure: Matryx Vanes are designed to operate between 40-120 psig.

Maximum supply pressure: 120 psig.

Temperature: All standard trim Matryx Vanes will operate in an ambient temperature range from 0° to 225° F (-17° to 107°C). Consult factory for applications beyond this range.

Speed of operation: The stroking speed of an actuator depends on a number of variables like valve type, pipeline flow conditions, size & length of air supply lines, air supply volume and pressure, etc. Normal stroke times range from 1-4 seconds. Consult factory for stroke times required outside of this range.

Operating media: Air or any non-corrosive gas. Consult factory when considering other operating media (water, hydraulic oil, etc.). For applications where extremely dry, non-lubricated air is used, special trim (O-rings and lubricants) may be required.

Materials of Construction

Housing	Die cast aluminum
Coating (external)	Alkyd enamel
Vane O-ring	Buna-N (Durometer 50)
Shaft O-rings (2)	Buna-N (Durometer 70)
Vane	Die cast aluminum
Shaft	Carbon steel
Bushings (2)	660 phosphor bronze
Lubricant*	Dubois MPG-2 Petroleum based grease
Housing sealer	RTV silicone rubber
For Fail Safe Models	
Accumulator tank	Steel
Check valve	Brass
Pilot control valve	Die cast aluminum

* Grease does not contain silicone when utilizing Buna-N or Viton seals. EPDM seals utilize silicone based grease.

Model	Air Consumption (Cubic inches per 90°)	Stroke Adjustment	
		Min.*	Max.
MX60	13.5	75°	112°
MX200	41.0	74°	110°
MX450	110.0	80°	110°
MX750	146.0	80°	110°
MX1250	232.0	80°	102°
MX3000	630.0	80°	98°

* Requires optional extended travel stop screws.

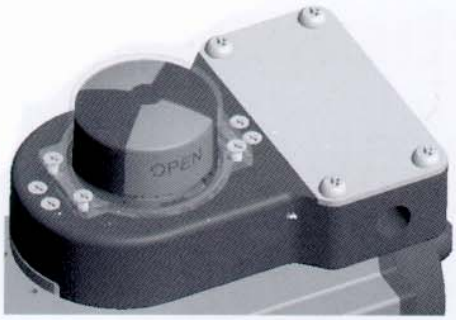

TUFSWITCH – Demanding, All Area Capability

- Epoxy coated aluminum housing
- 3D position indicator
- Very low profile design
- Direct actuator mounting w/integral mounting kit
- Magnetic targets are isolated and sealed
- Top actuator shaft is protected from contaminants
- NEMA 4, 4x, 6p, 7 & 9
- Non-incentive and intrinsically safe options
- Proximity or inductive switches only
- Three position dribble control option
- 4 to 20mA feedback transmitter option
- **A**ctuator **S**ensor **i**nterface option

ASi interface

MCR Series – Economical – General Purpose

- Engineered resin housing
- 3D position indicator
- Designed for use in NEMA 4, 4x environments
- General purpose and intrinsically safe options
- Mechanical or inductive switches

MCA Series – Conventional w/Multiple Options

- Epoxy coated aluminum or stainless steel housing
- 3D, Disk or No position indication
- NEMA 4, 4x, Class I Division 2 & intrinsically safe
- Mechanical, proximity or inductive switches
- World's first wireless option
- Three position dribble control option
- 4 to 20mA feedback transmitter option
- **A**ctuator **S**ensor **i**nterface option

ASi interface

MXA Series – Explosion Proof

- Epoxy coated aluminum housing
- 3D position indicator
- NEMA 4, 4x, 7 & 9
- Non-incentive and intrinsically safe options
- Mechanical, proximity or inductive switches
- Three position dribble control option
- 4 to 20mA feedback transmitter option
- **A**ctuator **S**ensor **i**nterface option

ASi interface

Xomox Sizing Program

- Build Projects
- Quote Projects
- Quick Actuator Sizing
- ISA Style Data Sheets
- Multiple Valve Sizing
- Simplified Valve Flow Sizing
  - Liquid
  - Gasses
  - Steam
- Common Engineering Performance Calculations
- Accumulator Tank Sizing
- Speed Of Operation
- Hot Line Mounting Kit Sizing

XOMOX®

CRANE ChemPharma Flow Solutions™
4444 Cooper Road, Cincinnati, OH 45030
Tel: (513) 745-6000
Fax: (513) 745-6086
www.xomox.com
www.cranechempharma.com

CRANE
ChemPharma Flow Solutions

brands you trust.

CRANE Chempharma Flow Solutions Include: Pipe - Valves - Fittings - Actuators - Pumps

DEPA® ELRO® RESISTOFLEX®

ResistoPure® revo® Saunders® the science inside XOMOX®

© 2009 CRANE ChemPharma Flow Solutions, www.cranechempharma.com

PN329738 - 09/05 2M C&O Printed in USA

XOMOX®

Technische Dokumentation
Technical Documentation

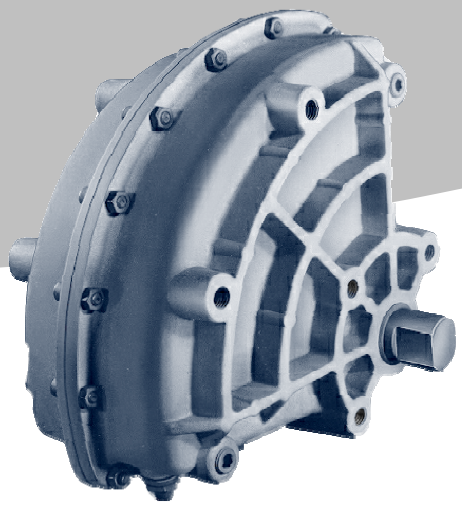

TUFLIN®
XACT Vane Type Actuators

XOMOX International GmbH & Co.
Von-Behring-Straße 15
D-88131 Lindau / Deutschland

Doc. Nr.: tdb_xact_gb

Januar 2008

XACT Pneumatic actuators are ideal for all rotation stem valves

- **Compact design**
- **Only one moving part**
- **No air leakage**
- **Light weight**
- **External corrosion resistant coating**
- **Long cycle life**
- **Maximum cycling speed**
- **Maximum torque output also at low working pressure**
- **Air connection on both sides possible**

Design Features & Benefits

XACT pneumatic actuators are ideal for all rotation stem valves with 0-90°rotation.
The simple proven construction offers direct rotary output eliminating the need to convert from linear to rotary motion.
The seals between housing and vane are accomplished by a special one-piece o-ring. Precised machining and special internal surface treatment guarantee tight sealing, long life and minimal maintenance.
Simple mounting of limit switches, manual override, positioners etc. on actuator top.

Scope of Supply

Design Versions
Series XACT for Torques up to 2000 nm
TYPE MX 3000 for Torques from 1500 up to 3300 nm

Materials

Body	Aluminium-Tioxal-coated
Paddle	Aluminium
Seal	Buna-N, Viton-O

Operating Pressure: Max. 8 bar

Temperature Range:

Buna-N Ring:	290 K to 380 K (-17 °C to +107 °C or 0 F to +225 F)
Viton-O-Ring	233 K to 453 K (-40 °C to +180 °C or –40 F to + 356 F)

Cycling rate:
Up to 8 cycles per minute.

Cycling Time:
1 to 7 sec

Working Media:
Air hydraulic oil or other (non-corrosive) media.

Available Actuator devices and accessories
Air Connection on both sides possible

Options
Solenoid valves, Limit switches, Safe systems

Special Versions (Examples):
- Stainless steel shaft
- Extended screws
- Specially greased
- PTFE inner coating
- External coating acc. to customer requirements
- Cryogenic application (- 40°C)
- High temperature application (300°F)

and more options

XOMOX®

Materials of Construction

Item	Qty.	Description	Material
1	1	Housing top I	Die-cast aluminium
2	1	Bushing	Bronze
3	1	Paddle I	Die-cast aluminium
3a	1	Safety Bearing	Nylon
4	1	Shaft	Steel
5*	2	Shaft o-ring	Buna-N
6*	1	Paddle seal	Buna-N
7	1	Housing bottom	Die-cast aluminium
8	2	Alignment dowel	Steel cadium plated
9	15	Nut	Stell cadium plated
10	15	Housing screw	Steel cadium plated
11	2	Stroke adjustment screw	1.4541 (stainless steel)
12	2	Gasket	Rubber/Steel
13	2	Disc	Steel cadium plated
14	2	Lock nut	Steel cadium plated

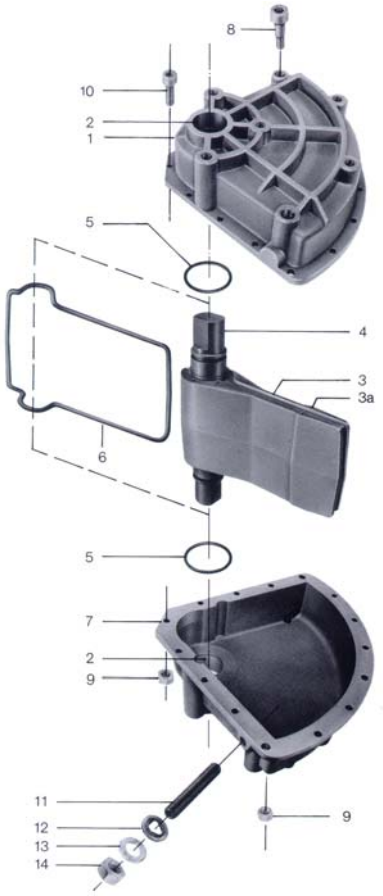

Torques

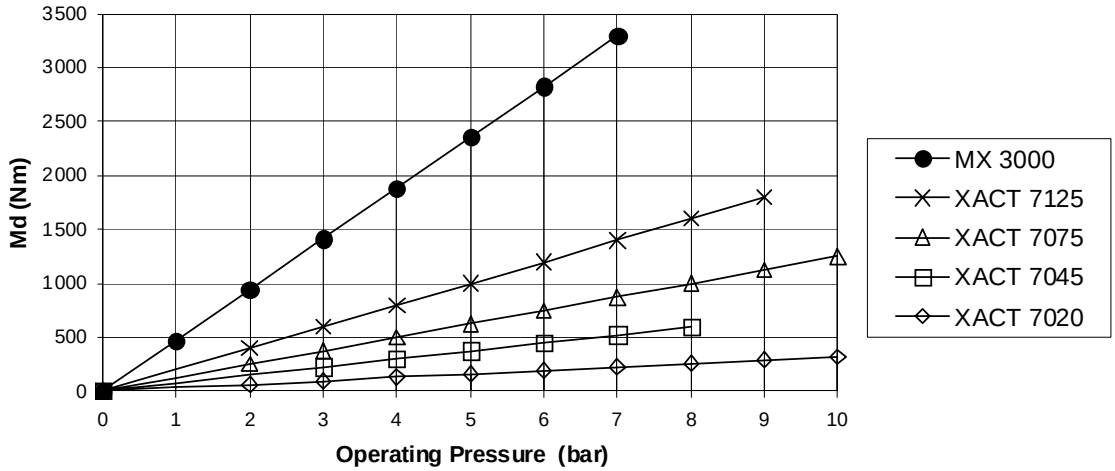

MX 3000

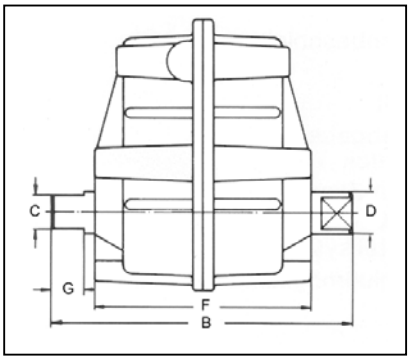

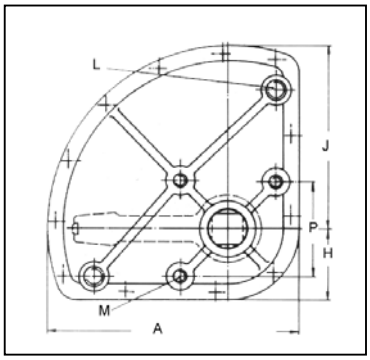

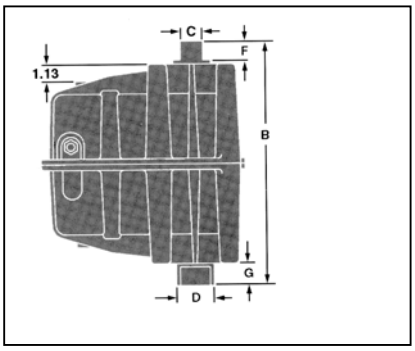

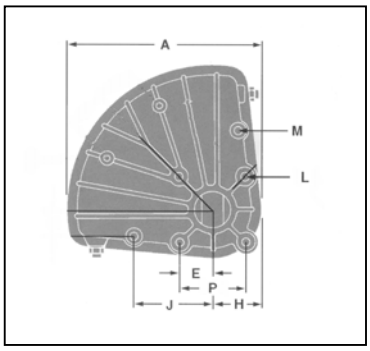

	7020	7045	7075	7125	MX 3000
A	174.5	188.5	236	276.4	346
B	163.5	266.5	266.5	254	422
C	19	28.7	28.7	28.7	38.1
D	28.8	36.6	36.6	36.6	63.4
E					58
F	112.7	189	189	177.8	33
G	19	28.7	28.7	28.7	39
H	52.5	66.5	66.5	-	88
J	122	169.5	169.5	-	140
L	¼ NPT	¼ NPT	¼ NPT	3/8 – 18 NPT	38
M	M10	M14	M14	M14	M 18
P	76	89	89	-	117

	7020	7045	7075	7125	MX 3000
Air Consumption in m³ for 90°	670	1803	1950	3800	
Stroke Adjustement	74°-110°	80°-110°	74°-110°	80°-102°	70°-110°
Weight (kg)	3.2	6.4	8.2	10.0	29.6

XOMOX will fit any other rotary actuators (pneumatic, hydraulic, electric) per customer requirements.
This also applies to all suitable solenoid and pilot valves, limit switches, positioners and other accessories.

Crane Co., and its subsidiaries cannot accept responsibility for possible errors in catalogues, brochures, other printed materials, and website information. Crane Co. reserves the right to alter its products without notice, including products already on order provided that such alteration can be made without changes being necessary in specifications already agreed. All their trademarks in this material are property of the Crane Co. or its subsidiaries. The Crane and Crane brands logotype are registered trademarks of Crane Co. All rights reserved.

XOMOX®

brands you trust.

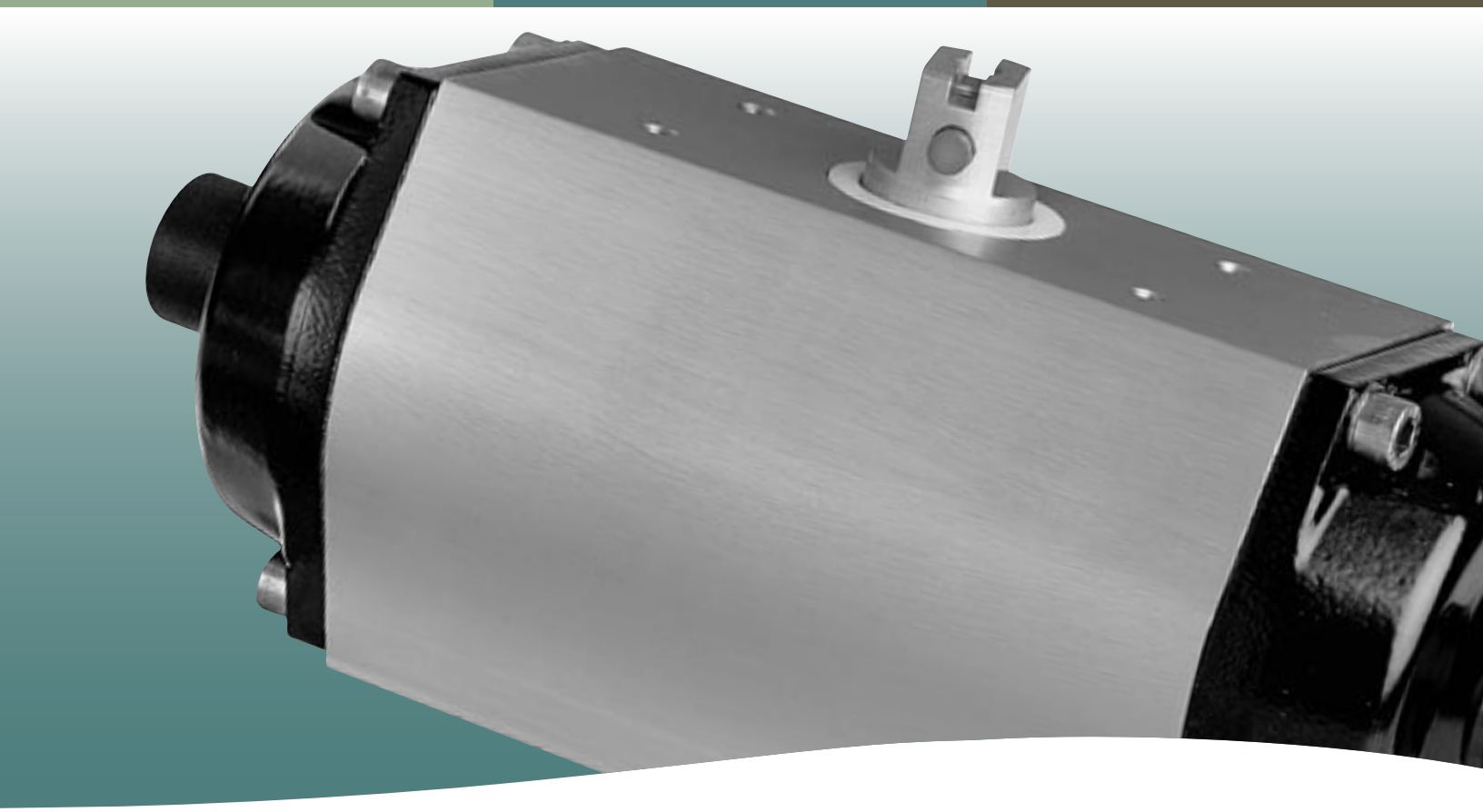

Pneumatic Rack and Pinion Actuators

CRANE

ChemPharma Flow Solutions

www.cranechempharma.com

DESIGN FEATUR

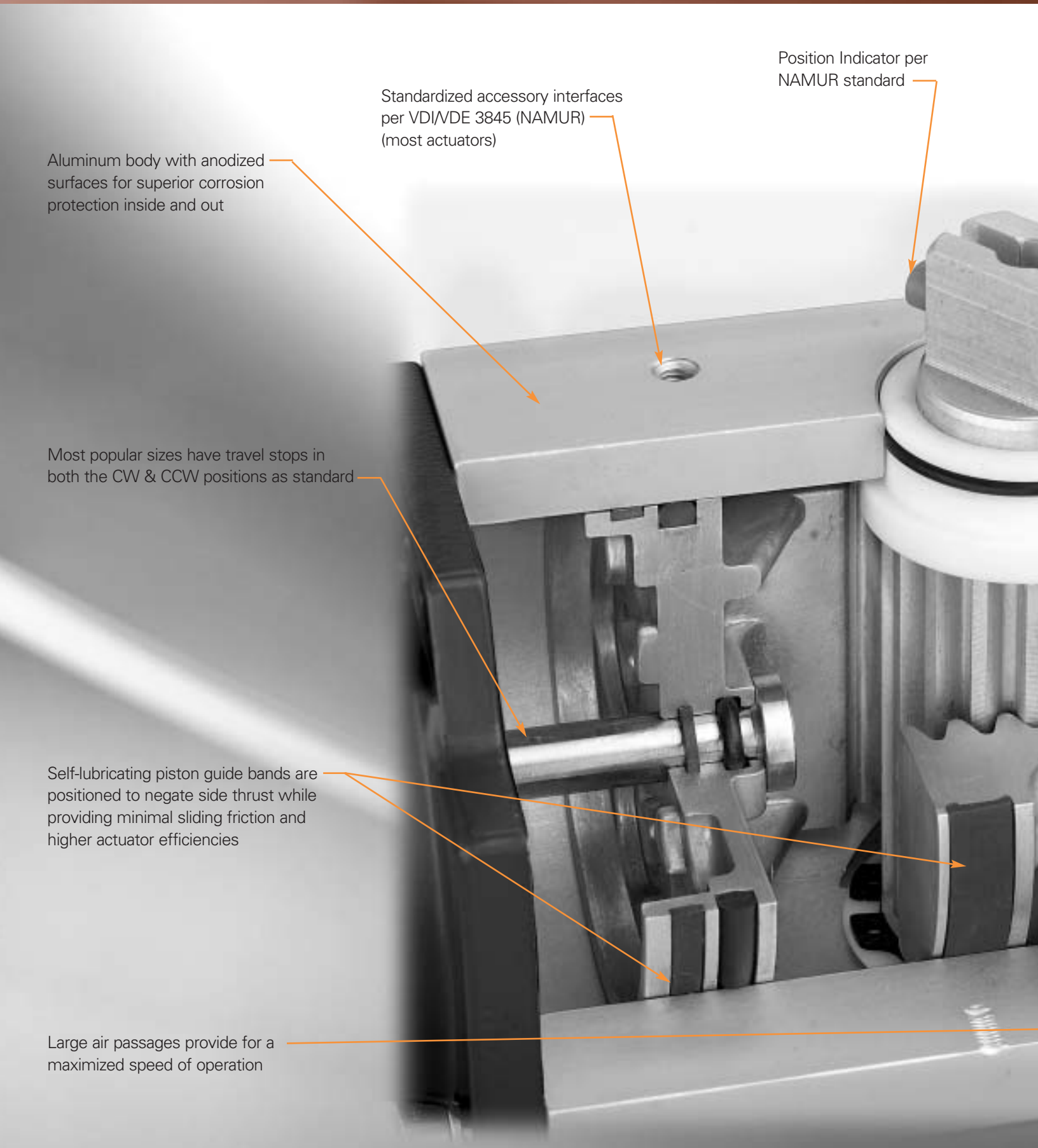

© Copyright Xomox Corporation 2002
All rights reserved. Xomox®, Tufline®, Matryx® are registered trademarks of Xomox corporation.
Xomox XRP is a trademark of Xomox Corporation.

RES & BENEFITS

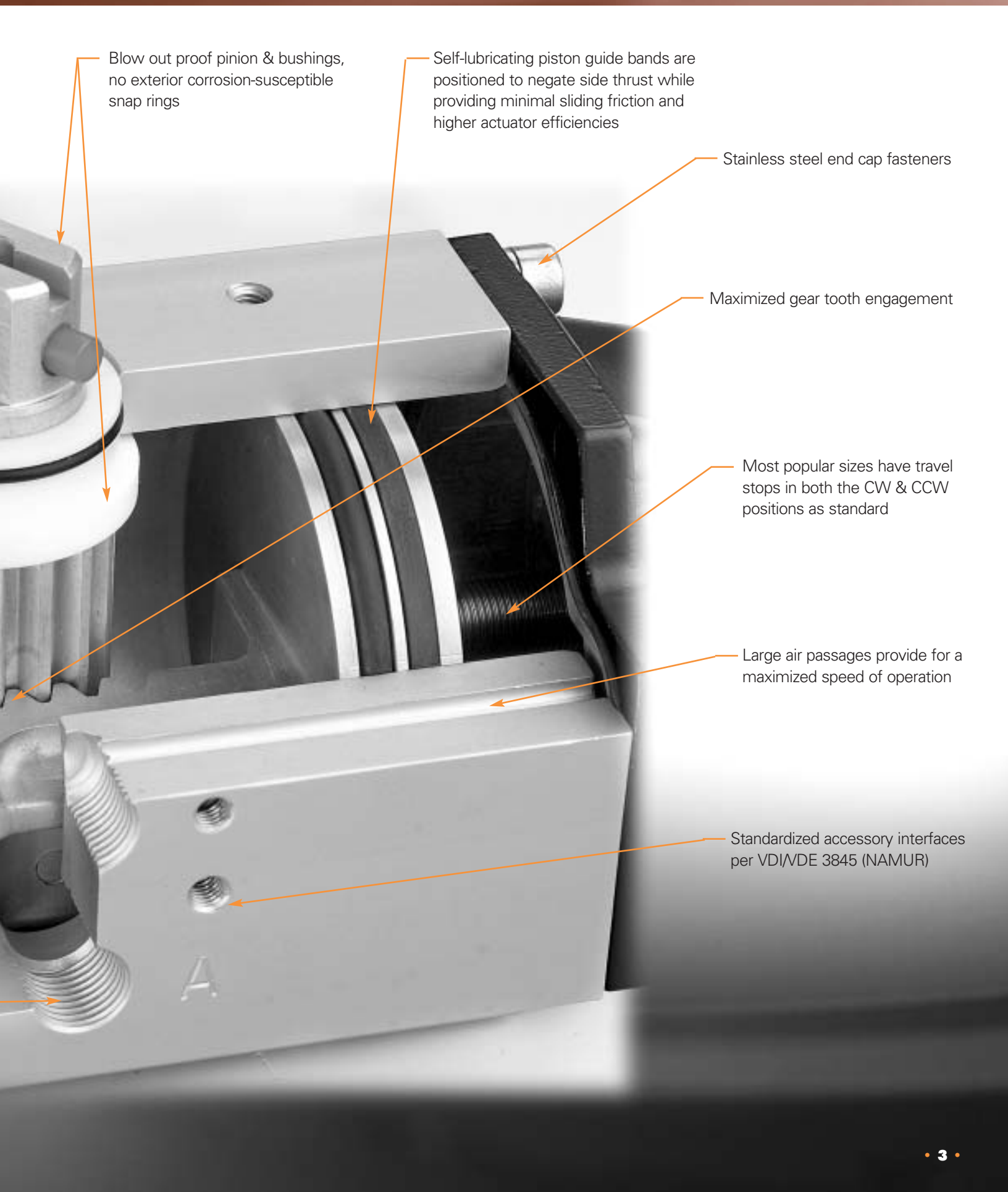

XRP™ DOUBLE ACTING TORQUES

Imperial Units

XOMOX XRP DOUBLE ACTING TORQUE (in-lbs)

Model	40 psig	60 psig	80psig	100 psig	120 psig
XS **001** D00A	30	45	61	76	N/A*
XS **002** D00A	66	99	132	165	N/A*
XS **006** D00A	151	227	303	378	N/A*
XS **012** D00B	301	451	602	752	903
XS **025** D00B	586	878	1171	1464	1757
XS **050** D00B	1082	1622	2163	2704	3245
XS **090** D00B	2058	3086	4115	5144	6173
XS **130** D00B	3131	4697	6263	7828	9394
XS **180** D00B	4116	6173	8231	10289	12347
XS **205** D00A	6167	9251	12334	15418	18501
XS **380** D00A	9256	13883	18511	23139	27767
XS **630** D00A	15418	23127	30836	38545	46254
XS **960** D00A	23416	35124	46832	58540	70248
XS **H15** D00A	35844	53765	71687	89609	107531

Notes:
All torque values are inch-pounds for pressure supply listed.
Recommended Safety Factor = 10% for double acting actuators.
* Max Pressure 100 psig

XOMOX XRP SPRING RETURN TORQUE (in-lbs)

	Spring Quantity	Spring Start	Spring End	40 psig Start	40 psig End	60 psig Start	60 psig End	80 psig Start	80 psig End	100 psig Start	100 psig End	120 psig Start	120 psig End
XS 002	02	16	8	58	50	91	83	124	116	157	149	N/A*	N/A*
	04	32	16	50	34	83	67	116	100	149	133	N/A*	N/A*
	06	48	24	42	18	75	51	108	84	141	117	N/A*	N/A*
	08	64	32			67	35	100	68	133	101	N/A*	N/A*
	10	80	40			59	19	92	52	125	85	N/A*	N/A*
	12	96	48					84	36	117	69	N/A*	N/A*
	14	112	56					76	20	109	53	N/A*	N/A*
XS 006	02	36	18	133	115	209	190	284	266	360	342	N/A*	N/A*
	04	73	36	115	78	190	154	266	230	342	305	N/A*	N/A*
	06	109	55	97	42	172	118	248	193	324	269	N/A*	N/A*
	08	146	73			154	81	230	157	305	232	N/A*	N/A*
	10	182	91			136	45	211	120	287	196	N/A*	N/A*
	12	219	109					193	84	269	159	N/A*	N/A*
	14	255	128					175	47	251	123	N/A*	N/A*
XS 012	02	73	36	265	228	415	379	565	529	716	680	866	830
	04	145	73	228	156	379	306	529	457	680	607	830	757
	06	218	109	192	83	342	234	493	384	643	534	794	685
	08	290	145			306	161	457	311	607	462	757	612
	10	363	181			207	88	420	239	571	389	721	540
	12	435	218					384	166	534	317	685	467
	14	508	254					348	94	498	244	649	395
XS 025	02	142	71	515	444	808	737	1100	1030	1393	1322	1686	1615
	04	283	142	444	302	737	595	1030	888	1322	1181	1615	1474
	06	425	212	373	161	666	454	959	746	1252	1039	1544	1332
	08	566	283			595	312	888	605	1181	898	1474	1190
	10	708	354			524	170	817	463	1110	756	1403	1049
	12	850	425					746	322	1039	614	1332	907
	14	991	496					676	180	968	473	1261	766
XS 050	02	259	130	952	822	1493	1363	2034	1904	2574	2445	3115	2985
	04	519	259	822	563	1363	1104	1904	1644	2445	2185	2985	2726
	06	778	389	692	303	1233	844	1774	1385	2315	1926	2856	2467
	08	1038	519			1104	585	1644	1125	2185	1666	2726	2207
	10	1297	649			974	325	1515	866	2055	1407	2596	1948
	12	1557	778					1385	606	1926	1147	2467	1688
	14	1816	908					1255	347	1796	888	2337	1429

Notes:
All torque values are inch-pounds for pressure supply listed.
Torque values are same for both Spring Fail Clockwise, FCW(XRP style S) & Counterclockwise, FCCW, (XRP style A).
Recommended Safety Factor = 20% for single acting actuators.
* Max Pressure 100 psig

XRP™ SPRING RETURN TORQUES

Imperial Units

XOMOX XRP SPRING RETURN TORQUE (in-lbs) continued

	Spring Quantity	Spring Start	Spring End	40 psig Start	40 psig End	60 psig Start	60 psig End	80 psig Start	80 psig End	100 psig Start	100 psig End	120 psig Start	120 psig End
XS 090	02	474	237	1820	1583	2849	2612	3878	3641	4907	4670	5936	5699
	04	949	474	1583	1109	2612	2138	3641	3167	4670	4195	5699	5224
	06	1423	712	1346	635	2375	1663	3404	2692	4433	3721	5461	4750
	08	1897	949			2138	1189	3167	2218	4195	3247	5224	4276
	10	2372	1186			1901	715	2929	1744	3958	2772	4987	3801
	12	2846	1423					2692	1269	3721	2298	4750	3327
	14	3321	1660					2455	795	3484	1824	4513	2852
XS 130	02	719	359	2772	2413	4338	3978	5903	5544	7469	7110	9034	8675
	04	1437	719	2413	1694	3978	3260	5544	4825	7110	6391	8675	7957
	06	2156	1078	2053	975	3619	2541	5185	4107	6750	5672	8316	7238
	08	2847	1437			3260	1822	4825	3388	6391	4954	7957	6519
	10	3593	1797			2900	1104	4466	2669	6032	4235	7597	5801
	12	4312	2156					4107	1951	5672	3516	7238	5082
	14	5030	2515					3747	1232	5313	2798	6879	4363
XS 180	02	945	473	3643	3170	5701	5228	7759	7286	9816	9344	11874	11401
	04	1890	945	3170	2225	5228	4283	7286	6341	9344	8399	11401	10456
	06	2836	1418	2698	1280	4756	3338	6813	5396	8871	7453	10929	9511
	08	3781	1890			4283	2393	6341	4450	8399	6508	10456	8566
	10	4726	2363			3810	1447	5868	3505	7926	5563	9984	7621
	12	5671	2836					5396	2560	7453	4618	9511	6676
	14	6616	3308					4923	1615	6981	3673	9039	5730
XS 205	02	1490	745	5422	4677	8505	7760	11589	10844	14673	13927	17756	17011
	04	2981	1490	4677	3186	7760	6270	10844	9354	13927	12437	17011	15521
	06	4471	2236	3932	1696	7015	4780	10099	7863	13182	10947	16266	14030
	08	5961	2981			6270	3289	9354	6373	12437	9456	15521	12540
	10	7452	3726			5525	1799	8608	4883	11692	7966	14775	11050
	12	8942	4471					7863	3392	10947	6476	14030	9559
	14	10432	5216					7118	1902	10202	4985	13285	8069
XS 380	02	2237	1119	8137	7018	12765	11646	17393	16274	22020	20902	26648	25530
	04	4475	2237	7018	4781	11646	9409	16274	14037	20902	18665	25530	23292
	06	6712	3356	5900	2544	10528	7172	15155	11799	19783	16427	24411	21055
	08	8949	4475			9409	4934	14037	9562	18665	14190	23292	18818
	10	11186	5593			8290	2697	12918	7325	17546	11953	22174	16581
	12	13424	6712					11799	5088	16427	9715	21055	14343
	14	15661	7830					10681	2850	15309	7478	19936	12106
XS 630	02	3728	1864	13554	11690	21263	19400	28972	27109	36681	34818	44391	42527
	04	7455	3728	11690	7963	19400	15672	27109	23381	34818	31090	42527	38799
	06	11183	5591	9827	4235	17536	11944	25245	19653	32954	27362	40663	35071
	08	14910	7455			15672	8217	23381	15926	31090	23635	38799	31344
	10	18638	9319			13808	4489	21517	12198	29226	19907	36935	27616
	12	22366	11183					19653	8471	27362	16180	35071	23889
	14	26093	13047					17790	4743	25499	12452	33208	20161
XS 960	03	5591	2796	20620	17825	32328	29532	44036	41240	55744	52948	67452	64656
	06	11183	5591	17825	12233	29532	23941	41240	35649	52948	47357	64656	59065
	09	16774	8387	15029	6642	26737	18350	38445	30058	50153	41766	61861	53474
	12	22366	11183			23941	12758	35649	24466	47357	36174	59065	47882
	15	27957	13979			21145	7167	32853	18875	44561	30583	56269	42291
	18	33549	16774					30058	13283	41766	24991	53474	36699
XS H15	02	8663	4331	31512	27181	49434	45103	67356	63024	85278	80946	103199	98868
	04	17325	8663	27181	18518	45103	36440	63024	54362	80946	72284	98868	90205
	06	25988	12994	22849	9855	40771	27777	58693	45699	76615	63621	94537	81543
	08	34651	17325			36440	19114	54362	37036	72284	54958	90205	72880
	10	43314	21657			32109	10452	50030	28374	67952	46295	85874	64217
	12	51976	25988					45699	19711	63621	37633	81543	55554
	14	60639	30320					41368	11048	59289	28970	77211	46892

Notes:

All torque values are inch-pounds for pressure supply listed.

Torque values are same for both Spring Fail Clockwise, FCW(XRP style S) & Counterclockwise, FCCW, (XRP style A).

Recommended Safety Factor = 20% for single acting actuators.

XRP™ DOUBLE ACTING TORQUES

Metric Units

XOMOX XRP DOUBLE ACTING TORQUE (Nm)

Model	3 Bar	4 Bar	5 Bar	6 Bar	7 Bar	8 Bar
XS **001** D00A	3.7	5.0	6.2	7.4	8.7	N/A*
XS **002** D00A	8.1	10.8	13.5	16.2	18.9	N/A*
XS **006** D00A	18.6	24.8	31.0	37.2	43.4	N/A*
XS **012** D00B	37	49	62	74	86	99
XS **025** D00B	72	95	119	143	167	191
XS **050** D00B	133	177	222	266	310	364
XS **090** D00B	253	337	421	505	589	673
XS **130** D00B	385	513	642	770	898	1026
XS **180** D00B	506	675	843	1012	1181	1350
XS **205** D00A	758	1011	1264	1517	1770	2023
XS **380** D00A	1138	1517	1896	2275	2654	3033
XS **630** D00A	1896	2528	3159	3791	4423	5055
XS **960** D00A	2879	3839	4799	5758	6718	7677
XS **H15** D00A	4407	5876	7345	8814	10283	11752

Notes:
All torque values are Newton-meters for pressure supply listed.
Recommended Safety Factor = 10% for double acting actuators.
* Max Pressure 7 Bar

XOMOX XRP SPRING RETURN TORQUE (Nm)

	Spring Quantity	Spring Start	Spring End	3 Bar Start	3 Bar End	4 Bar Start	4 Bar End	5 Bar Start	5 Bar End	6 Bar Start	6 Bar End	7 Bar Start	7 Bar End	8 Bar Start	8 Bar End
XS 002	02	1.8	0.9	7.2	6.3	9.9	9.0	12.6	11.7	15.3	14.4	18.0	17.1	N/A*	N/A*
	04	3.6	1.8	6.3	4.5	9.0	7.2	11.7	9.9	14.4	12.6	17.1	15.3	N/A*	N/A*
	06	5.4	2.7	5.4	2.7	8.1	5.4	10.8	8.1	13.5	10.8	16.2	13.5	N/A*	N/A*
	08	7.2	3.6	4.5	0.9	7.2	3.6	9.9	6.3	12.6	9.0	15.3	11.7	N/A*	N/A*
	10	8.0	4.5			6.3	2.8	9.0	5.5	11.7	8.2	14.4	10.9	N/A*	N/A*
	12	10.8	5.4					8.1	2.7	10.8	5.4	13.5	8.1	N/A*	N/A*
	14	12.6	8.3					5.2	0.9	7.9	3.6	10.6	6.3	N/A*	N/A*
XS 006	02	4.0	2.0	16.6	14.6	22.8	20.8	29.0	27.0	35.2	33.2	41.4	39.4	N/A*	N/A*
	04	8.2	4.1	14.5	10.4	20.7	16.6	26.9	22.8	33.1	29.0	39.3	35.2	N/A*	N/A*
	06	12.2	6.1	12.5	6.4	18.7	12.6	24.9	18.8	31.1	25.0	37.3	31.2	N/A*	N/A*
	08	16.4	8.2	10.4	2.2	16.6	8.4	22.8	14.6	29.0	20.8	35.2	27.0	N/A*	N/A*
	10	20.6	10.3			14.5	4.2	20.7	10.4	26.9	16.6	33.1	22.8	N/A*	N/A*
	12	24.6	12.3					18.7	6.4	24.9	12.6	31.1	18.8	N/A*	N/A*
	14	28.8	14.4					16.6	2.2	22.8	8.4	29.0	14.6	N/A*	N/A*
XS 012	02	8.3	4.1	32.9	28.7	45.2	41.0	57.5	53.3	69.9	65.7	82.2	78.0	94.5	90.3
	04	16.6	8.2	28.8	20.4	41.1	32.7	53.4	45.0	65.8	57.4	78.1	69.7	90.4	82.0
	06	24.9	12.3	24.7	12.1	37.0	24.4	49.3	36.7	61.7	49.1	74.0	61.4	86.3	73.7
	08	33.2	16.4	20.6	3.8	32.9	16.1	45.2	28.4	57.6	40.8	69.9	53.1	82.2	65.4
	10	41.5	20.5			28.8	7.8	41.1	20.1	53.5	32.5	65.8	44.8	78.1	57.1
	12	49.8	24.6					37.0	11.8	49.4	24.2	61.7	36.5	74.0	48.8
	14	57.1	28.7					32.9	4.5	45.3	16.9	57.6	29.2	69.9	41.5
XS 025	02	16	8	64	56	87	79	111	103	135	127	159	151	183	175
	04	32	16	56	40	79	63	103	87	127	111	151	135	175	159
	06	48	24	48	24	71	47	95	71	119	95	143	119	167	143
	08	64	32	40	8	63	31	87	55	111	79	135	103	159	127
	10	80	40			55	15	79	39	103	63	127	87	151	111
	12	96	48					71	23	95	47	119	71	143	95
	14	112	56					63	7	87	31	111	55	135	79
XS 050	02	30	15	118	103	162	147	207	192	251	236	295	280	349	334
	04	59	29	104	74	148	118	193	163	237	207	281	251	335	305
	06	89	44	89	44	133	88	178	133	222	177	266	221	320	275
	08	118	58	75	15	119	59	164	104	208	148	252	192	306	246
	10	148	73			104	29	149	74	193	118	237	162	291	216
	12	178	88					134	44	178	88	222	132	276	186
	14	207	102					120	15	164	59	208	103	262	157

Notes:
All torque values are Newton-meters for pressure supply listed.
Torque values are same for both Spring Fail Clockwise, FCW(XRP style S) & Counterclockwise, FCCW, (XRP style A).
Recommended Safety Factor = 20% for single acting actuators.
* Max Pressure 7 Bar

XRP™ SPRING RETURN TORQUES
Metric Units

XOMOX XRP SPRING RETURN TORQUE (Nm) continued

	Spring Quantity	Spring Start	Spring End	3 Bar Start	3 Bar End	4 Bar Start	4 Bar End	5 Bar Start	5 Bar End	6 Bar Start	6 Bar End	7 Bar Start	7 Bar End	8 Bar Start	8 Bar End
XS 090	02	56	27	226	197	310	281	394	365	478	449	562	533	646	617
	04	112	53	200	141	284	225	368	309	452	393	536	477	602	561
	06	168	80	173	85	257	169	341	253	425	337	509	421	593	505
	08	224	107	146	29	230	113	314	197	398	281	482	365	566	449
	10	280	134			203	57	287	141	371	225	455	309	539	393
	12	336	160					261	85	345	169	429	253	513	337
	14	392	187					234	29	318	113	402	197	486	281
XS 130	02	84	41	344	301	472	429	601	558	729	686	857	814	985	942
	04	169	81	304	216	432	344	561	473	689	601	817	729	945	857
	06	253	122	263	132	391	260	520	389	648	517	776	645	904	773
	08	337	162	223	48	351	176	480	305	608	433	736	561	864	689
	10	422	203			310	91	439	220	567	348	695	476	823	604
	12	506	244					398	136	526	264	654	392	782	520
	14	590	284					358	52	486	180	614	308	742	436
XS 180	02	111	53	453	395	622	564	790	732	959	901	1128	1070	1297	1239
	04	222	107	399	284	568	453	736	621	905	790	1074	959	1243	1128
	06	332	160	346	174	515	343	683	511	852	680	1021	849	1190	1018
	08	443	213	293	63	462	232	630	400	799	569	968	738	1137	907
	10	554	267			408	121	576	289	745	458	914	627	1083	796
	12	665	320					523	178	692	347	861	516	1030	685
	14	776	373					470	67	639	236	808	405	977	574
XS 205	02	169	84	674	589	927	842	1180	1095	1433	1348	1686	1601	1939	1854
	04	337	169	589	421	842	674	1095	927	1348	1180	1601	1433	1854	1686
	06	506	253	505	252	758	505	1011	758	1264	1011	1517	1264	1770	1517
	08	674	337	421	84	674	337	927	590	1180	843	1433	1096	1686	1349
	10	843	421			590	168	843	421	1096	674	1349	927	1602	1180
	12	1011	506					758	253	1011	506	1264	759	1517	1012
	14	1180	590					674	84	927	337	1180	590	1433	843
XS 380	02	253	126	1012	885	1391	1264	1770	1643	2149	2022	2528	2401	2907	2780
	04	506	253	885	632	1264	1011	1643	1390	2022	1769	2401	2148	2780	2527
	06	756	379	759	382	1138	761	1517	1140	1896	1519	2275	1898	2654	2277
	08	1011	506	632	127	1011	506	1390	885	1796	1264	2148	1643	2527	2022
	10	1264	632			885	253	1264	632	1643	1011	2022	1390	2401	1769
	12	1517	758					1138	379	1517	758	1896	1137	2275	1516
	14	1769	885					1011	127	1390	506	1769	885	2148	1264
XS 630	02	421	211	1685	1475	2317	2107	2948	2738	3580	3370	4212	4002	4844	4634
	04	843	421	1475	1053	2107	1685	2738	2316	3370	2948	4002	3580	4634	4212
	06	1264	632	1264	632	1896	1264	2527	1895	3159	2527	3791	3159	4423	3791
	08	1685	843	1053	211	1685	843	2316	1474	2948	2106	3580	2738	4212	3370
	10	2107	1053			1475	421	2106	1052	2738	1684	3370	2316	4002	2948
	12	2528	1264					1895	631	2527	1263	3159	1895	3791	2527
	14	2949	1475					1684	210	2316	842	2948	1474	3580	2106
XS 960	03	632	316	2563	2247	3523	3207	4483	4167	5442	5126	6402	6086	7361	7045
	06	1264	632	2247	1615	3207	2575	4167	3535	5126	4494	6086	5454	7045	6413
	09	1896	948	1931	983	2891	1943	3851	2903	4810	3862	5770	4822	6729	5781
	12	2528	1264	1615	351	2575	1311	3535	2271	4494	3230	5454	4190	6413	5149
	15	3160	1580			2259	679	3219	1639	4178	2598	5138	3558	6097	4517
	18	3792	1896					2903	1007	3862	1966	4822	2926	5781	3885
XS H15	02	979	489	3918	3428	5387	4897	6856	6366	8325	7835	9794	9304	11263	10773
	04	1958	979	3428	2449	4897	3918	6366	5387	7835	6856	9304	8325	10773	9794
	06	2937	1468	2939	1470	4408	2939	5877	4408	7346	5877	8815	7346	10284	8815
	08	3616	1958	2449	791	3918	2260	5387	3729	6856	5198	8325	6667	9794	8136
	10	4894	2447			3429	982	4898	2451	6367	3920	7836	5389	9305	6858
	12	5873	2937					4408	1472	5877	2941	7346	4410	8815	5879
	14	6852	3792					3553	493	5022	1962	6491	3431	7960	4900

Notes:
All torque values are Newton-meters for pressure supply listed.
Torque values are same for both Spring Fail Clockwise, FCW(XRP style S) & Counterclockwise, FCCW, (XRP style A).
Recommended Safety Factor = 20% for single acting actuators.

DIMENSIONS FOR XRP™ RACK & PINION ACTUATORS

Dimensions are in inches and millimeters. Dimensions are nominal. For certified drawings contact factory.

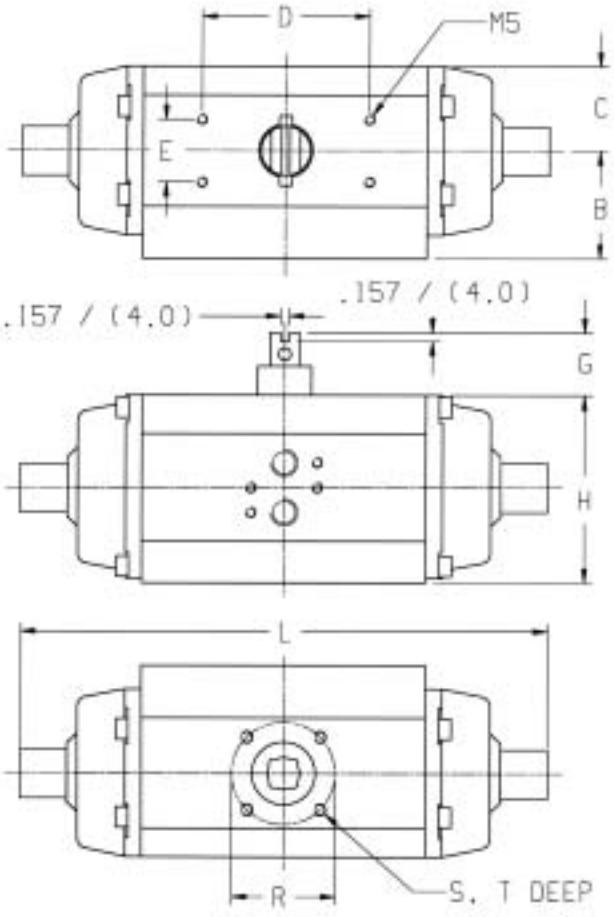

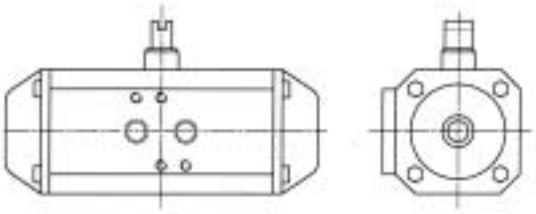

Sizes XS001, XS002 and XS006

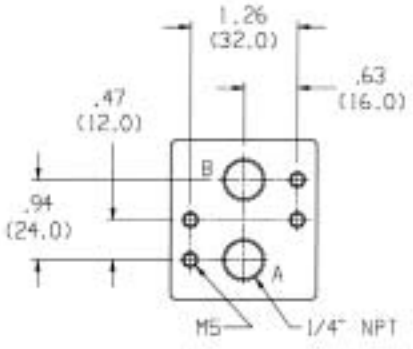

DIMENSION CHART, XRP XS001-XS180 RACK & PINION ACTUATORS

Size	L	G	H	B	C	D	E	R	S	T	ISO	SQ
XS001	3.62 92	0.79 20	1.77 45	1.79 45.5	0.81 20.5	1.97 50	0.98 25	1.42 36	M5	0.28 7	F03	0.35 9
XS002	5.59 142	0.79 20	2.15 54.5	1.89 48	1.00 25.4	1.97 50	0.98 25	1.65 42	M5	0.31 8	F04	0.43 11
XS006	6.81 173	0.79 20	2.93 74.5	2.22 56.5	1.36 34.5	3.15 80	1.18 30	1.97 50	M6	0.39 10	F05	0.55 14
XS012	10.43 265	0.79 20	3.58 91	2.66 67.5	1.61 41	3.15 80	1.18 30	1.97 50	M6	0.35 9	F05	0.55 14
XS025	11.42 290	0.79 20	4.76 121	3.23 82	2.17 55	3.15 80	1.18 30	1.97 50	M6	0.35 9	F05	0.55 14
XS050	14.37 365	0.79 20	5.75 146	3.70 94	2.64 67	3.15 80	1.18 30	2.76 70	M8	0.49 12.5	F07	0.67 17
XS090	17.72 450	1.18 30	6.54 166	4.29 109	3.07 78	5.12 130	1.18 30	4.02 102	M10	0.63 16	F10	0.87 22
XS130	20.67 525	1.18 30	7.56 192	4.53 115	3.54 90	5.12 130	1.18 30	4.92 125	M12	0.71 18	F12	1.06 27
XS180	21.06 535	1.18 30	8.58 218	5.08 129	4.02 102	5.12 130	1.18 30	4.92 125	M12	0.71 18	F12	1.06 27
	Inches mm											

DIMENSIONS FOR XRP™ RACK & PINION ACTUATORS

Dimensions are in inches and millimeters. Dimensions are nominal. For certified drawings contact factory.

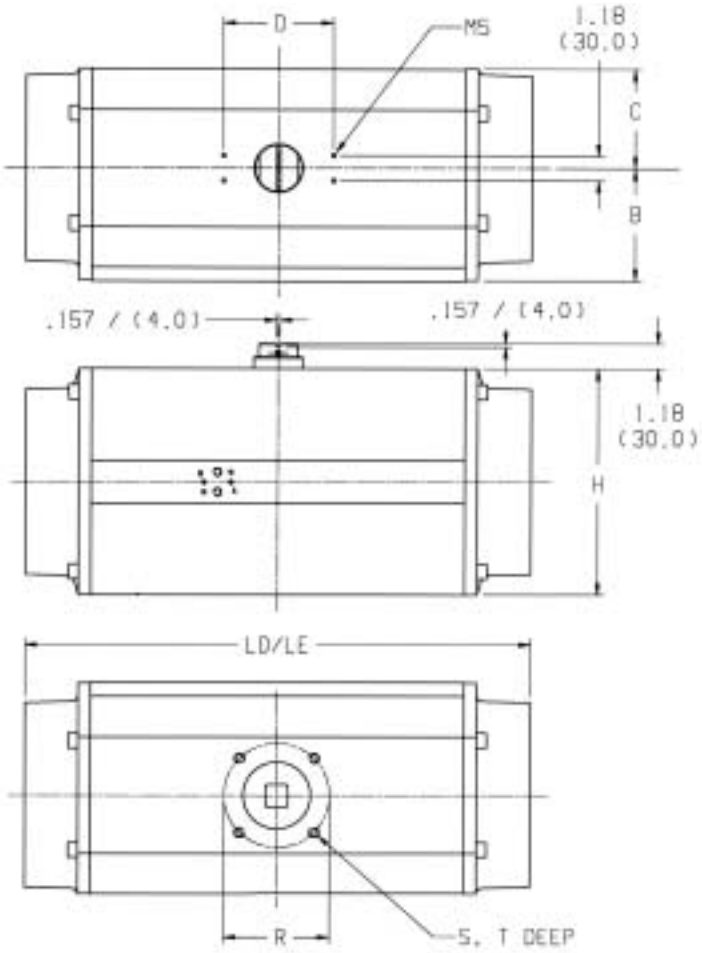

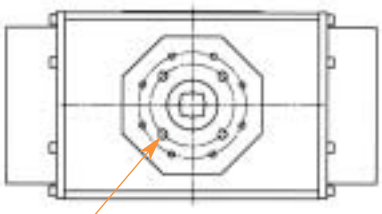

Actuator/Valve ISO F25
8 Hole Mounting Pattern
Mfg. Bolt Circle: 10.00 (254)
Mfg. Bolt Hole: M16
Mfg. Bolt Hole Depth: 87 (22.0)
(XS960 has 2 ISO Patterns)

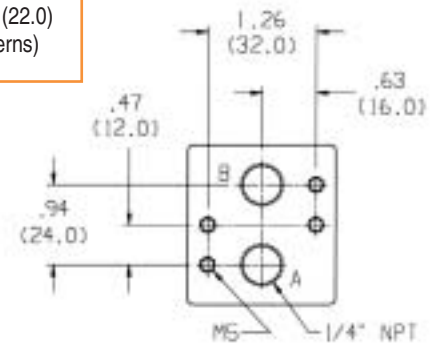

DIMENSION CHART, XRP XS205-XSH15 RACK & PINION ACTUATORS

Size	LD	LE	H	B	C	D	R	S	T	ISO	SQ
XS205	15.24 387	19.13 486	10.71 272	5.91 150	4.69 119	5.12 130	5.51 140	M16	0.98 25	F14	1.42 36
XS380	20.08 510	23.70 602	10.71 272	5.91 150	4.69 119	5.12 130	5.51 140	M16	0.98 25	F14	1.42 36
XS630	22.09 561	29.17 741	13.54 344	7.36 187	6.77 172	5.91 150	6.50 165	M20	1.26 32	F16	1.81 46
XS960	22.05 560	29.69 754	16.61 422	8.90 226	8.31 211	5.91 150	6.50 165	M20	0.35 32	F16*	1.81 46
XSH15	26.34 669	34.61 879	17.72 450	9.45 240	8.86 225	5.91 150	ISO F25 Only See XS960/XSH15 View				2.17 55
	Inches mm										

LD Length of Double-acting Actuator
LE Length of Spring Return Actuator
* This Model also has ISO F25 Mounting Pattern

MATERIALS OF CONSTRUCTION

	Double Acting: XS001, XS002 & XS006	
Item	Description	Material
1	Body	Aluminum Alloy, Extruded
2	Piston	POM
3	Shaft	Aluminum / Anodized
4	Right End Cap	Polyamide
5	Left End Cap	Polyamide
6	Screw	Stainless Steel
7	Washer	Stainless Steel
8	Indicator	Polyamide
9	O-ring - Piston Stainless Steel	NBR
10	O-ring - Shaft	NBR
11	O-ring - Endcap	NBR
12	Bearing	PTFE, Carbon Filled
13	Insert	Aluminum / Anodized
	Spring Return Parts	**Models XS002 & XS006**
14	Spring - Outer	CrSi Alloy / Coated
15	Spring - Inner	CrSi Alloy / Coated

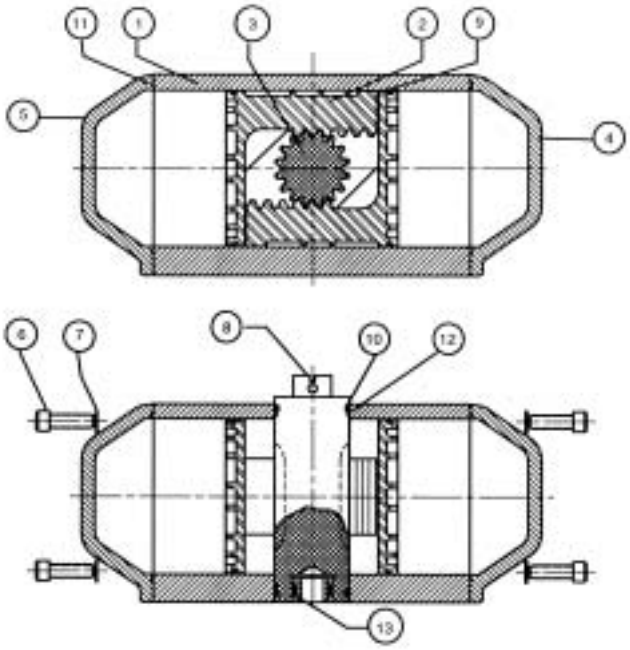

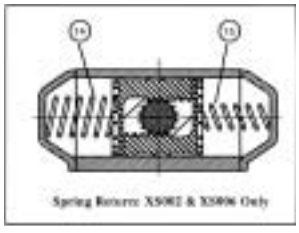

	Double Acting: XS205 through XSH15	
Item	Description	Material
1	Body	Aluminum / Anodized
2	Piston	Aluminum/St50K (Gear Teeth)
3	Shaft	Aluminum / Anodized
4	DA End Cap	Aluminum / Painted
5-7	Bearing	POM
8	Retaining Ring	Spring Steel
9-10	Piston Bearing	PTFE, Carbon Filled
11	O-ring - Piston	NBR
12	O-ring - Endcap	NBR
13	O-ring	NBR
14	O-ring - Shaft	NBR
15	Screw	Stainless Steel
16	Washer	Stainless Steel
17	Indicator	Polyamide
	Spring Return Parts	**Models XS205 & XSH15**
18	SR End Cap	Aluminum / Painted
19	Spring - CW Wound	CrSi Alloy / Coated
20	Spring - CCW Wound	CrSi Alloy / Coated

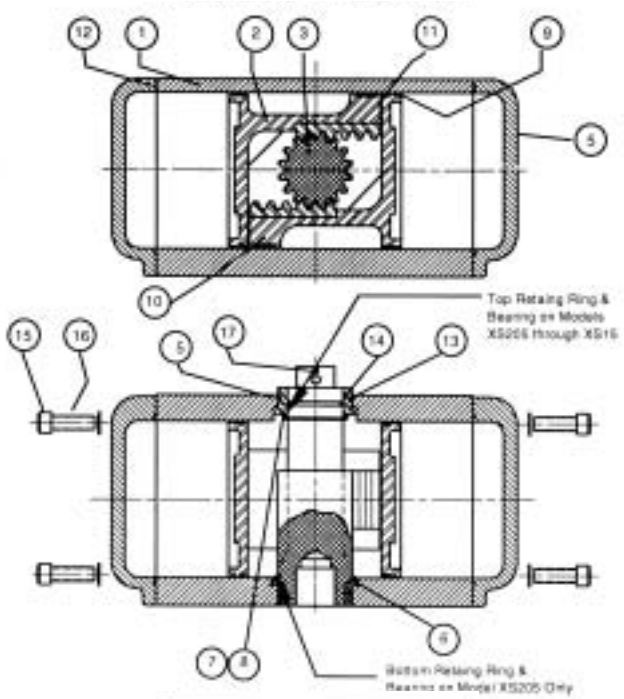

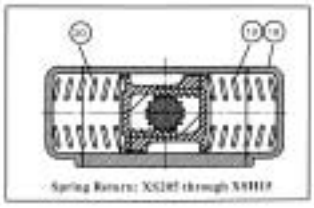

MATERIALS OF CONSTRUCTION

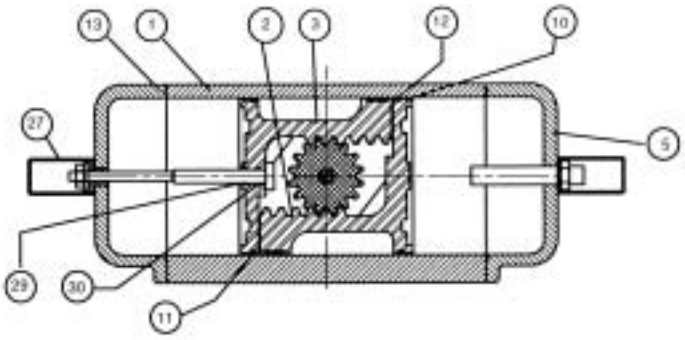

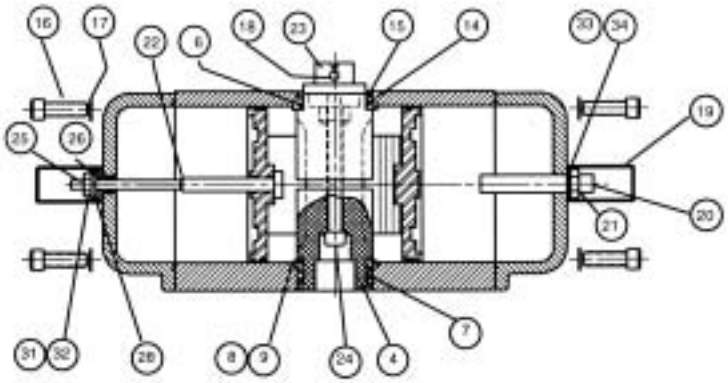

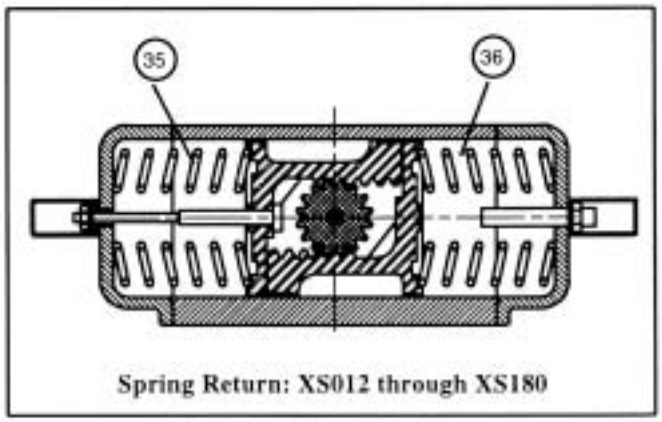

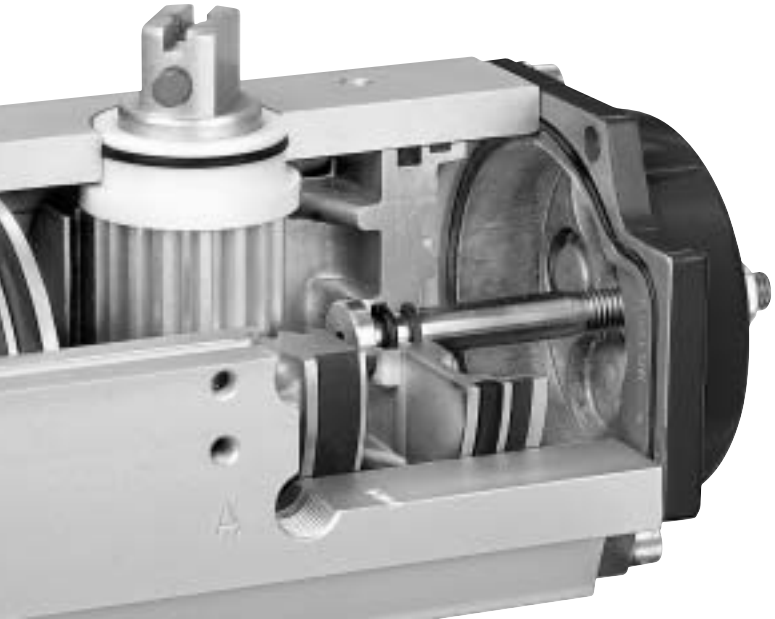

	Double Acting: XS012 through XS180	
Item	**Description**	**Material**
1	Body	Aluminum / Anodized
2	Piston "Open"	Aluminum
3	Piston "Closed"	Aluminum
4	Shaft	Aluminum / Anodized
5	End Cap	Aluminum / Painted
6-8	Bearing	POM
9	Retaining Ring	Spring Steel
10	Piston Bearing	PTFE, Carbon Filled
11	Piston Bearing	PTFE, Carbon Filled
12	O-ring - Piston	NBR
13	O-ring - Endcap	NBR
14	O-ring - Shaft	NBR
15	O-ring	NBR
16	Screw	Stainless Steel
17	Washer	Stainless Steel
18	Indicator	Polyamide
19	Protective Cap	Polyethylene
20	"Open" Stop Screw	Steel/ Zinc Plated
21	Sealing Nut	Steel/ Zinc Plated
22	"Closed" Stop Screw	Stainless Steel
23	Shaft - Top	Aluminum / Anodized
24	Shaft Screw	Steel/ Zinc Plated
25	Sealing Nut	Steel/ Zinc Plated
26	Threaded Insert	Stainless Steel
27	Protective Cap	Polyethylene
28	O-ring	NBR
29	Stop Screw Bearing	PTFE, Carbon Filled
30	Stop Screw O-ring	NBR
31	Washer	POM
32-33	O-Ring	NBR
34	Washer	POM
	Spring Return Parts	**Models XS012 - XS180**
35	Spring - CW Wound	CrSi Alloy / Coated
36	Spring - CCW Wound	CrSi Alloy / Coated

CONFIGURATION & SPECIFICATION

XOMOX XRP STANDARD MOUNTING CONFIGURATION

XRP Model	ISO Pattern	Mounting Config. (bolt circle)	Metric Bolting	NAMUR, WxLxH (mm)	Optional Spigot (mm)
XS001	F03	F03/V9 (36)	M5x4	25x50x15[1]	25
XS002	F04	F04/V11 (42)	M5x4	25x50x20[1]	30
XS006	F05	F04/V14 (50)	M6x4	30x80x20	35
XS012	F05	F05/V14 (50)	M6x4	30x80x20	35
XS025	F05	F05/V14 (50)	M6x4	30x80x20	35
XS050	F07	F07/V17 (70)	M8x4	30x80x20 + 30x130x20	55
XS090	F10	F10/V22 (102)	M10x4	30x130x30	70
XS130	F12	F12/V27 (125)	M12x4	30x130x30	85
XS180	F12	F12/V27 (125)	M12x4	30x130x30	85
XS205	F14	F14/V36 (140)	M16x4	30x130x30	100
XS380	F14	F14/V36 (140)	M16x4	30x130x30	100
XS630	F16	F16/V46 (165)	M20x4	30x150[1]x30	130
XS960	F16[2]	F16/V46 (165) +F25/V46 (254)	M20x4 M16x8	30x150[1]x30	130
		(XS 960 is standard with two mounting bolt circles			
XSH15	F25	F25/V55 (254)	M16x8	30x150[1]x30	130[1]

OPTIONAL MOUNTING CONFIGURATIONS

ISO Pattern	Order Code	Mounting Config. (bolt circle)	Metric Bolting	Optional Spigot (mm)
		(N/A)		
F03	A1	F03/V9 (36)	M5x4	25
F04	B1	F04/V11 (42)	M5x4	30
		(N/A)		
		(N/A)		
		(N/A)		
F07	D1	F07/V17 (70)	M8x4	55
F10	E1	F10/V22 (102)	M10x4	70
		(N/A)		
F12 F14	F1 G1	F12/V27 (125) F14/R45[1] (140)	M12x4 M16x4	85 100
F12 F14	F1 G1	F12/V27 (125) F14/R45[1] (140)	M12x4 M16x4	85 100
F14 F16	G2 H1	F14/V36 (140) F16/R70[1] (165)	M16x4 M20x4	100 130
F16[2]	H1	F16/R70 (165) +F25/R70 (254)	M20x4 M16x8	130
F25[2]	J4	F25/V55 (254) +F16/V55 (165)	M16x8 M20x4	130[1]
F25[2]	J2	F25/R75 (254) +F16/R75 (165)	M16x8 M20x4	130[1]
F25 F25 F25 F30	J1 J2 J3 K1	F25/R70[1] (254) F25/R75[1] (254) F25/R85[1] (254) F30/V75 (298)	M16x8 M16x8 M16x8 M20x8	130[1] 130[1] 130[1] 130[1]

Notes: 1) Indicates that this dimension is a non-standard ISO or NAMUR dimension for that particular pattern.
2) Standard and Optional configuration includes two mounting bolt circles.
3) V=Square (Vierkant); R=Round

XOMOX XRP SPECIFICATIONS

XRP Model	Weight (lbs (kg))		Air Connection Size	Travel Range		Adjustability		Operating Pressure Range (psi (bar))		Operating Temperature Range	
	DA	**SR**	**NPT**	**Max**	**Min**	**Pos 1**	**Pos 2**	**Min**	**Max**	**Min**	**Max**
XS001	0.7 (0.3)	N/A	1/4"	90°		0°	90°	36 (2.5)	145 (10)	-4°F (-20°C)	176°F (80°C)
XS002	1.3 (0.6)	1.8 (0.8)									
XS006	2.4 (1.1)	2.7 (1.2)									
XS012	4.9 (2.2)	5.3 (2.4)	1/4"	98°	74°	-4° to 8°	82° to 94°	29 (2)	145 (10)		
XS025	7.7 (3.5)	8.4 (3.8)									
XS050	13.0 (5.9)	14.1 (6.4)									
XS090	22.9 (10.4)	26.9 (12.2)									
XS130	41.9 (19.0)	43.7 (19.8)									
XS180	49.6 (22.5)	50.5 (22.9)									
XS205	66.2 (30.0)	104.5 (47.4)		90°		0°	90°				
XS380	79.4 (36.0)	133.2 (60.4)									
XS630	180.8 (82.0)	213.9 (97.0)									
XS960	273.4 (124.0)	297.7 (135.0)									
XSH15	333.0 (151.0)	268.2 (167.0)									

LIMIT SWITCH
PRODUCT OVERVIEW

TUFSWITCH – Demanding, All area Capability

- Epoxy coated aluminum housing
- 3D position indicator
- Very low profile design
- Direct actuator mounting w/integral mounting kit
- Magnetic targets are isolated and sealed
- Top actuator shaft is protected from contaminant's
- NEMA 4, 4x, 6p, 7 & 9
- Non-incentive and intrinsically safe options
- Proximity or inductive switches only
- Three position dribble control option
- 4 to 20mA feedback transmitter option
- **A**ctuator **S**ensor **i**nterface option

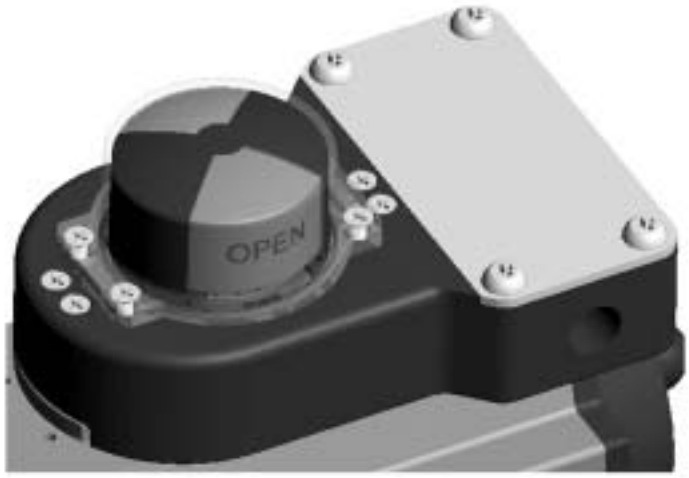

MCR Series – Economical – General Purpose

- Engineered resin housing
- 3D position indicator
- Designed for use in NEMA 4, 4x environments
- General purpose and intrinsically safe options
- Mechanical or inductive switches

MCA Series – Conventional w/Multiple Options

- Epoxy coated aluminum or stainless steel housing
- 3D, Disk or No position indication
- NEMA 4, 4x, Class I Division 2 & intrinsically safe
- Mechanical, proximity or inductive switches
- World's first wireless option
- Three position dribble control option
- 4 to 20mA feedback transmitter option
- **A**ctuator **S**ensor **i**nterface option

MXA Series – Explosion Proof

- Epoxy coated aluminum housing
- 3D position indicator
- NEMA 4, 4x, 7 & 9
- Non-incentive and intrinsically safe options
- Mechanical, proximity or inductive switches
- Three position dribble control option
- 4 to 20mA feedback transmitter option
- **A**ctuator **S**ensor **i**nterface option

XOMOX SIZING PROGRAM

- BUILD PROJECTS
- QUOTE PROJECTS

- QUICK ACTUATOR SIZING
- ISA STYLE DATA SHEETS
- MULTIPLE VALVE SIZING

COMMON ENGINEERING
PERFORMANCE CALCULATIONS

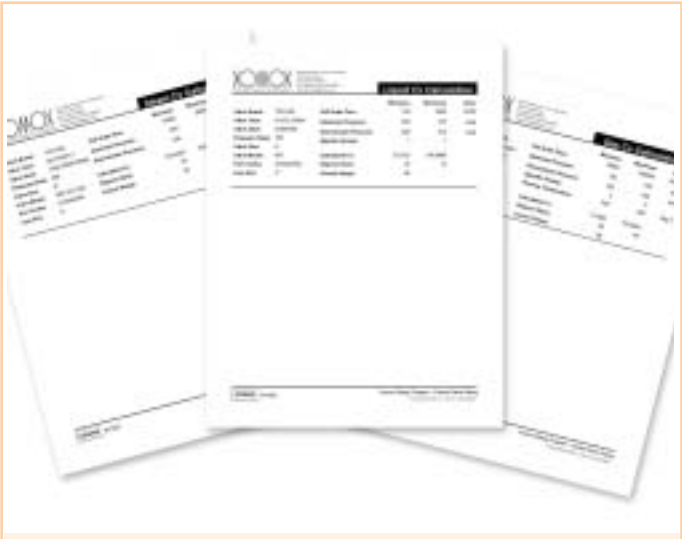

SIMPLIFIED VALVE FLOW SIZING
FOR LIQUIDS, GASSES, STEAM

HOW TO SPECIFY

STOCKED ACTUATOR CONFIGURATIONS
Part Number
(Utilize 9 digits as a minimum)

NON-STANDARD MODIFICATIONS
Options
(Use only if non-standard required)

Example:	X	S	180	S	08	B	0	0	00	0

Brand
Xomox : X

Pinion & Porting
ISO 5211 Square, 1/4" NPT air conn.: S

Size
001, 002, 006, 012, 025, 050, 090, 130, 180, 205, 380, 630, 960, H15: xxx

Action
Double Acting: D
FCW Spring: S
FCCW Spring: A

 # Springs
Double Acting, no springs: 00
Spring return, 02 thru 18 spring combinations: xx

Travel Stop
No Travel Stops, std on 001 to 006, 205 to H15: A
Dual travel Stops, std on 012 to 180, Integral to design, With 8 degrees of over travel: B

Temperature
Standard Nitrile seals (Buna-N rubber): 0
Low Temperature seals: 1
High Temperature seals: 2

Coating
Standard Anodized Body & Polyurethane Coated end caps: 0
Consult factory for other options: X

Other
Standard anodized aluminum pinion: 0
Consult factory for other options: X

Mounting Configuration
Standard ISO F-pattern for each body size: 00
Refer to page 10 for optional mounting configurations: X

PRODUCT RESPONSIBILITY

Xomox's concern for product performance extends to the product's period of service. We feel it is important for users to also be aware of their responsibilities. Our products are manufactured and used in numerous applications with a wide variety of service conditions. While general guidelines are often furnished, it obviously is not possible to provide complete and specific performance data for every conceivable service condition. Therefore, the end user must assume final responsibility for proper evaluation, application and performance of all products. The contents of this document are presented for information purposes only. Every effort has been made to ensure accuracy.

This information is not intended to be construed as warranties or guarantees, expressed or implied, nor imply use applicability, for products or services described herein. We reserve the right to modify or improve the designs and specifications of such products at any time without notice. As the manufacturer, Xomox sells its products and services pursuant to its standard terms and conditions of sale, including its limited warranty, copies of which are available upon request.
Xomox limits its liability specifically to the replacement or repair of defective items, or to a refund for same. Xomox does not accept liability for any incidental or consequential damages.

XOMOX®

CRANE ChemPharma Flow Solutions™
4444 Cooper Road, Cincinnati, OH 45030
Tel: (513) 745-6000
Fax: (513) 745-6086
www.xomox.com
www.cranechempharma.com

CRANE
ChemPharma Flow Solutions

brands you trust.

CRANE Chempharma Flow Solutions Include: Pipe - Valves - Fittings - Actuators - Pumps

DEPA® ELRO® RESISTOFLEX®

ResistoPure® revo® Saunders® the science inside XOMOX®

© 2009 CRANE ChemPharma Flow Solutions, www.cranechempharma.com

PN335170 - 10/02 2M C&O Printed in USA

XOMOX®

brands you trust.

Process Valves & Actuators

CRANE

ChemPharma Flow Solutions

www.cranechempharma.com

Worldwide capabilities pay off for Xomox customers.

With facilities in a dozen countries around the world, Xomox has unique capabilities for global sourcing of the latest technologies, innovative materials, and the most sophisticated manufacturing techniques.

The Xomox team turns these resources into problem solving valves for your most demanding applications.

Problem solvers.

Talk with a Xomox Sales Engineer about any aspect of your fluid handling system. You will get process improving answers.

Your Xomox Sales Engineer has the proven products and is backed by the technical expertise to help solve your toughest fluid handling problems.

Customer focus, customer satisfaction.

Xomox strives to fully understand your unique needs, and cost-effectively fulfill your requirements.

Processors know they can depend on Tufline valves and Xomox actuators for trouble free performance and superior service.

Processor partnerships.

Xomox people work closely with chemical processors. Partnering helps produce innovative, cost-effective valve products.

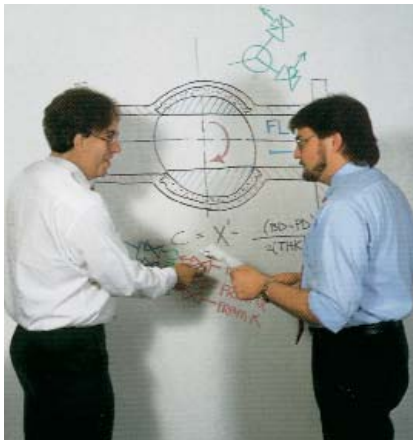

Patented performance.

Xomox valves and actuators incorporate a host of patented, exclusive, and unique features not available from any other manufacturer.

Emissions control leadership.

Xomox strongly champions testing procedures that precisely evaluate valve emission control performance, over time, in realistic applications.

You can breathe easier, knowing Xomox offers the broadest line of valves to handle hazardous media and control fugitive emissions.

© Copyright Xomox Corporation 1986, 2005.
All rights reserved. Xomox®,Tufline®, and Matryx® are registered trademarks of Xomox Corporation.
XRP™ is a trademark of Xomox Corporation.

Valve types.

Xomox valves are available in a broad range of valve types for virtually every processing requirement in your most demanding applications.

Materials.

Xomox valve materials range from carbon steel to the most exotic alloys. You can also choose from many specialized lining and sleeve materials to suit media and temperature requirements.

Sizes.

Various Xomox valves range in size from ½″ to 102″.

Pressure Classes.

Xomox valves are available in ANSI Classes 150, 300, and 600.

Temperature ratings.

Xomox offers valves for cryogenic service, for extreme thermal cycling, and for high temperature applications up to 1300°F.

Available materials, sizes, options, and special configurations vary between valve types.

Single-source responsibility.

With Xomox . . .
- Family of valves
- Actuators & Control Accessories
- Xomox problem-solving expertise

. . . you are assured of single-source responsibility for valve packages that will provide optimum performance in your applications.

Xomox Automation & Service Centers are strategically located to provide comprehensive . . .
- Automated valve packages
- Valve modifications
- Valve repair
- Application assistance

Dramatically reducing the cost of valving.

Processors who compare various types and brands of valves in demanding applications find a huge difference in the real cost of the valves over time.

Savings of tens-of-thousands of dollars.

When the formula below is used to compare Xomox with other valves, the results often indicate that there is a tremendous difference in the long-term cost of ownership.

That's because Xomox valves are designed to pay off at the bottom line with reduced maintenance requirements and greatly extended service life.

Valve cost control calculations.

Calculate the life-time cost of valving and compare the true cost of valves over time.

+ *Initial valve price* **x** *the number of original and replacement valves in the application*
+ *Monitoring and maintenance costs (and associated downtime costs)*
+ *Parts and repair costs (and associated downtime costs)*
+ *Costs associated with proper disposal* **x** *the number of valves replaced*

= *Total cost of valve ownership over time*

Put Xomox valves to the test.

Compare your present valves and Xomox valves in your most demanding application. You may soon discover there is no comparison.

Do the math. For valves in demanding processing applications, . . . real value is performance over time.

Xomox Actuators & Automation Accessories

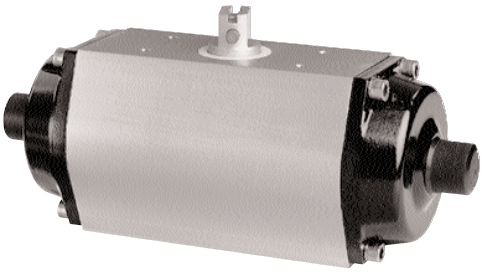

Xomox XRP™ Actuators

The unique features of Xomox XRP Pneumatic Rack & Pinion Actuators include:

- A balanced pinion which does not require an external retaining clip to prevent the pinion from blowing out.
- Individual single point adjustment for both the CW and CCW directions.
- 98 degrees of total travel on the most popular sizes.
- Vertically aligned air passages allow increased air flow minimizing cycle time.

Matryx® Rack & Pinion Actuators

Matryx® Rack & Pinion Actuators have a unique suspension system that guides each piston smoothly through its complete stroke, insuring consistent torque output.

Xomox Limit Switches

A wide variety of switching options and other automation accessories are available.

Matryx® Vane Actuators

Matryx® Vane Actuators provide reliable and efficient remote control of any type of rotary operation. They are used for ball, plug, and butterfly valves as well as other mechanisms such as dampers, switches, and safety devices. They are available up to 30,000 in-lbs of torque.

Xomox Automation & Service Centers are located throughout the United States. They provide:

- Automated valve packages
- Valve modifications
- Valve repair
- Application assistance
- On-site inventories of valves, actuators, and accessories assure fast turn-around.
- A new-valve factory warranty backs every automated, modified, and repaired valve.

The Xomox Sizing Program will help you design a more efficient and economical processing system and assure proper actuator size selection.

XOMOX®

CRANE ChemPharma Flow Solutions™
4444 Cooper Road, Cincinnati, OH 45030
Tel: (513) 745-6000
Fax: (513) 745-6086
www.xomox.com
www.cranechempharma.com

CRANE
ChemPharma Flow Solutions

brands you trust.

CRANE Chempharma Flow Solutions Include: Pipe - Valves - Fittings - Actuators - Pumps

DEPA® ELRO® RESISTOFLEX®

ResistoPure® revo® Saunders® the science inside XOMOX®

© 2009 CRANE ChemPharma Flow Solutions, www.cranechempharma.com

PN329754 - 02/05 2M C&O Printed in USA

XOMOX®

brands you trust.

Pneumatic Rack and Pinion Actuators
Series XRP

CRANE®

ChemPharma Flow Solutions

www.cranechempharma.com

HOW TO SPECIFY

STOCKED ACTUATOR CONFIGURATIONS
Part Number
(Utilize 9 digits as a minimum)

NON-STANDARD MODIFICATIONS
Options
(Use only if non-standard required)

Example:	X	D	180	S	08	B	0	0	00	0

Brand

Xomox : X

Pinion & Porting

ISO 5211/DIN 3337 Diamond, Gas 45° threads. D
ISO 5211 Square, NPT: S

Size

001, 002, 006, 012, 025, 050, 090, 130, 180, 205, 380, 630, 960, H15: xxx

Action

Double Acting: D
single acting fail close: S
single acting fail open: A

 # Springs

Double Acting, no springs: 00
Spring return, 02 thru 18 spring combinations: xx

Limit & Travel Stop

No limit or travelstops (excepted 001-006 with limit stop to open as standard) A
Dual travel Stops, std on 012 to 180, Integral to design, B
With 8 degrees of over travel:
Limit stop to open/close as option for sizes 205-H15: C

Temperature

Standard Nitrile seals (Buna-N rubber): 0
Low Temperature seals: 1
High Temperature seals: 2

Coating

Standard Anodized Body & Polyurethane Coated end caps: 0
Consult factory for other options: X

Other

Standard anodized aluminum pinion: 0
Consult factory for other options: X

Mounting Configuration

Standard ISO F-pattern for each body size: 00
Refer to page 10 for optional mounting configurations: X

DESIGN FEATUR

Position indicator per NAMUR standard

Standardized accessory interfaces per VDI/VDE 3845 (NAMUR) (most actuators)

Aluminum body with anodized surfaces for superior corrosion protection inside and outside

Stainless steel end cap fasteners

Self-lubricating piston guide bands are positioned to negate side thrust while providing minimal sliding friction and higher actuator efficiencies

Large air passages provide for a maximized speed of operation

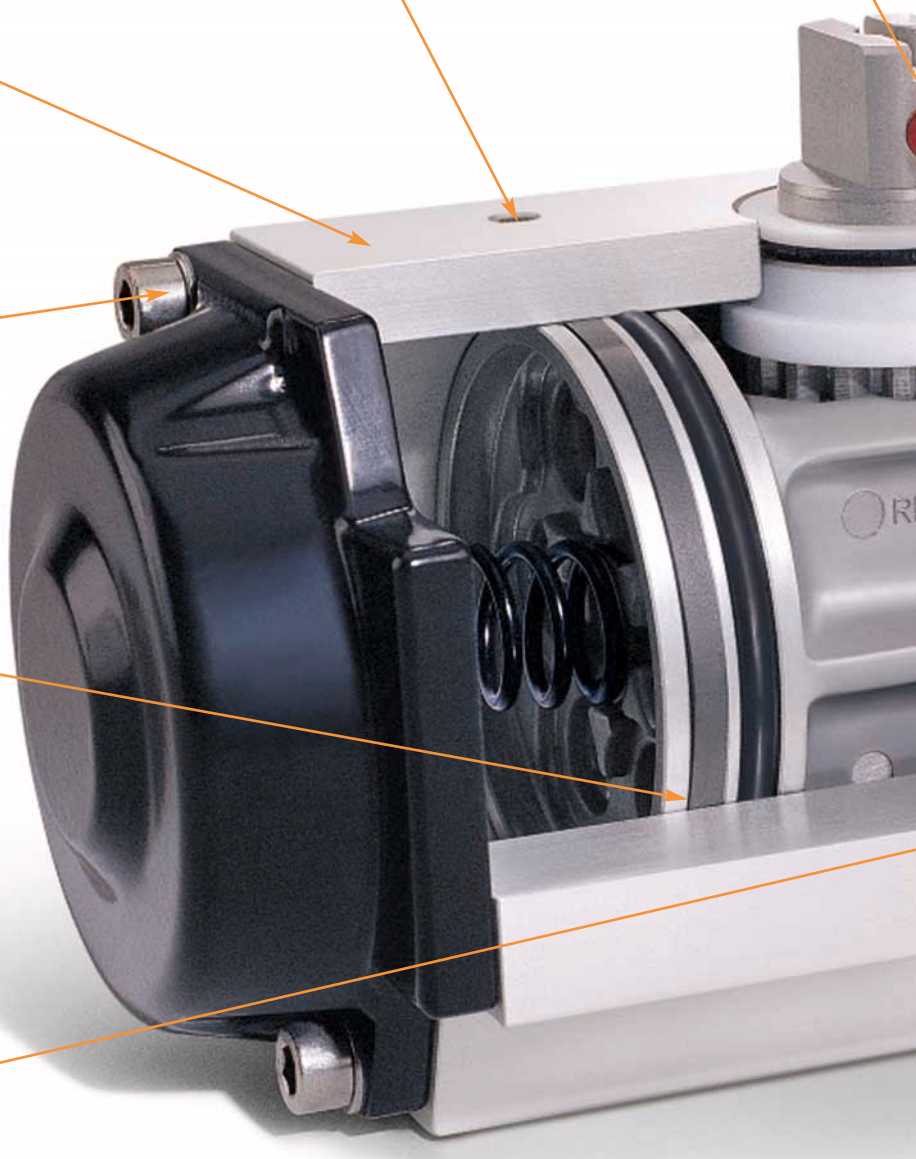

© Copyright Xomox Corporation 2003
All rights reserved. Xomox®, Tuflin® are registered trademarks of Xomox corporation.
Xomox XRP is a trademark of Xomox Corporation.

RES & BENEFITS

Blow out proof pinion & bushings, no exterior corrosion-susceptible snap rings

Self-lubricating piston guide bands are positioned to negate side thrust while providing minimal sliding friction and higher actuator efficiencies

Maximized gear tooth engagement

Large air passages provide for a maximized speed of operation

Standardized accessory interfaces per VDI/VDE 3845 (NAMUR)

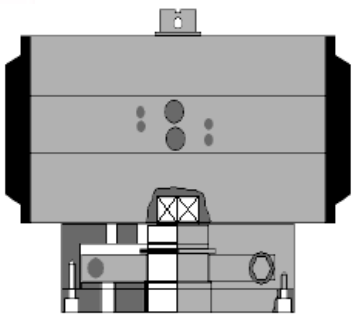

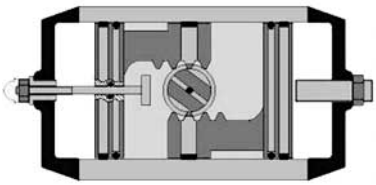

Travel Stops open/close for sizes 012 - 180

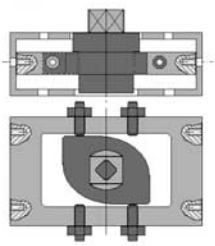

Bottom flanged external limit Stops open/close for sizes 205 - H15

GLOBAL CAPABILITIES FOR GLOBAL CUSTOMERS

Worldwide capabilities

No matter where in the world you are, located XOMOX technical support and services are available for you from:

- 18 Manufacturing Facilities
- 18 Service Centers
- 50 Sales Offices

Global locator

For a listing of Xomox Manufacturing Facilities, Service Centers, Regional Offices, visit our web site **www.xomox.com**

Product selection

XOMOX offers the broadest line of process valves, actuators, accessories, and related services including:

- XOMOX Process Valves
- XOMOX XRP™ Actuators
- Saunders diaphragm valves

XOMOX®

XOMOX International GmbH & Co.
Von-Behring-Straße 15
D-88131 Lindau/Bodensee
Tel.: (49) 8382-702-0
Fax. (49) 8382-702-144
www.xomox.com

CRANE®
ChemPharma Flow Solutions

CRANE ChemPharma Flow Solutions Include: Pipe - Valves - Fittings - Actuators - Pumps

DEPA® ELRO PSI™ LINED PIPING SYSTEMS RESISTOFLEX®

ResistoPure® revo® Saunders® the science inside XOMOX®

© 2009 Xomox International GmbH & Co, www.cranechempharma.com

CP-XX-BU-EN-A1-06-09-01 - Due to constant development and innovation, we reserve the right to make changes to technical specifications as and when required.