regom instruments

flow & process solutions

regom instruments

flow & process solutions

Potravinářský průmysl
Farmaceutický průmysl
Biotechnologie
Petrochemie
Chemický průmysl
Energetika
Úprava vody
Papírenství a zpracování celulózy
Plynárenský průmysl
Keramický průmysl
Zpracovatelský průmysl

Firma s tradicí od r. 1990 se při svém vzniku zaměřila na dodávky základních komponent, přístrojové a měřící techniky a dodávky technologií pro farmaceutický a potravinářský průmysl. Cílem bylo zajistit kompletní dodavatelsko - inženýrské služby, včetně servisu. V roce 1998, který byl pro firmu velmi významným mezníkem, proběhla transformace společnosti do nynější formy. V dalších letech činnosti společnosti dochází k rozšíření portfolia a je navazována spolupráce s partnery v oblasti armatur, komponent, ventilů, procesní měřící techniky a čerpadel.

Oblastí působnosti je potravinářský, farmaceutický průmysl, biotechnologie, chemický průmysl, petrochemie, úprava vody, papírenství a celulóza, energetika, keramický průmysl a zpracovatelský průmysl.

Firma REGOM INSTRUMENTS je díky širokému dodavatelskému portfoliu a bohatým zkušenostem schopna zajistit dodávky armatur, komponent, čerpadel, přístrojů a zařízení.

Cílem společnosti REGOM INSTRUMENTS je poskytování kvalitních služeb a spolehlivých dodávek pro co nejširší okruh zákazníků.

REGOM INSTRUMENTS s.r.o.
tel.: +420 241 402 206, +420 241 433 152
fax: +420 241 400 290, +420 241 433 151
e-mail: regom@regom.cz
skype: regom-office
www.regom.com

Product Information ITM-4DW **FOOD**

Four-beam turbidity measurement ITM-4DW

Application / Specified Usage

· Turbidity measurement in the range of 0...5000 NTU or 0...1250 EBC
· Suitable for process and drinking water applications

Application Examples

· Fresh water monitoring in the beverage industry
· Water/wastewater monitoring, e.g. in dairies
· Coolant circuit monitoring

Hygienic Design / Process Connection

· CIP/SIP cleaning up to 130 °C
· Stainless steel housing, optical block of PPSU, optics of sapphire glass (FDA compliant)
· Process connections: Milk pipe DIN 11851, Tri-Clamp, DIN flange

Features / Advantages

· Soiling of the optics is compensated
· Compact device; separate evaluation unit not required
· Units switchable between NTU and EBC (11 ranges each)
· 4 freely selectable measurement ranges, externally switchable
· Smallest measurement range 0...5 NTU or 0...1 EBC
· Largest measurement range 0...5000 NTU or 0...1250 EBC
· Smallest pipe diameter DN25
· Color-independent measurement (wavelength 860 nm)
· Switching output and analog output

Options / Accessories

· Electrical connection with M12 plug-in connector
· Preassembled cable for M12 plug-in connector

Measuring Principle of the 4-Beam-Turbidity Meter

The ITM-4 measures turbidity using the 4-beam alternating light method. The transmitter contains two infrared senders and two infrared receivers arranged at right angles to each other. To determine the turbidity value, the senders are alternately activated. When sender 1 is active, receiver 1 detects the transmitted light and receiver 2 detects the light scattered at 90°. When sender 2 is active, the situation is reversed.
An exact turbidity value is calculated from the four measured values of a measurement cycle. Since a transmitted light measurement is available as a reference for each 90° scattered light measurement, interference factors such as contamination of the optics or component ageing can automatically be compensated. Disturbing infl uences from the sporadic occurrence of solids and air bubbles are largely cancelled out due to the evaluation of multiple measurement cycles.

Authorisations

FDA

ITM-4DW/GG65/M12

Measurement Principle

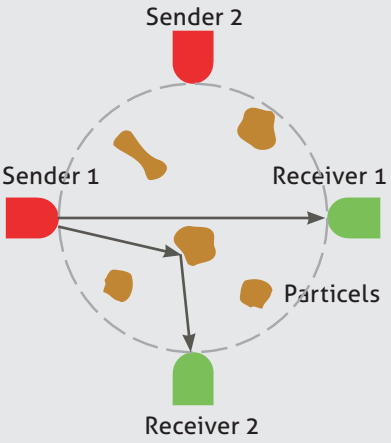

Specification		
Process connection	Milk pipe DIN 11851 DIN flange Tri-Clamp	DN 25; 40; 50; 65; 80; 100 DN 25; 40; 50; 65; 80; 100 DIN: DN 25; 40; 50; 65; 80; 100 ASME: DN 1"; 1.5"; 2"; 2.5"; 3"; 4"
Materials	Connection head Housing Optics block Optics Window Seal	Stainless steel 1.4305, Ø 89 mm Stainless steel 1.4404 PPSU Sapphire glass PMMA EPDM, FDA-compliant
Temperature ranges	Ambient Process CIP-/SIP-cleaning	-10...+60 °C 0...100 °C to 130 °C / maximum 30 minutes
Operating pressure		Maximum 10 bar
Protection class		IP 69 K (with M12 connector)
Measurement range	NTU EBC	0...5; 10; 20; 50; 100; 200; 500; 1000; 2000; 4000; 5000 0...1; 2; 5; 10; 20; 50; 100; 200; 500; 1000; 1250
Damping in seconds	Adjustable t_{90} Time	0; 1; 2; 4; 8; 16; 32; 64; 128 sec.
Accuracy		See the following table "ITM-4 measurement accuracy"
Measurement priciple	As per EN 7027	4-beam alternating light
4-beam alternating light	As per EN 7027	860 nm ±60 nm
Display	LCD with backlight	2 x 8-digit
Electrical connection	Cable screw fitting Cable connection Supply voltage	2 x M16 x 1.5 (PG) 2 x M12 connector 1.4305 (optional) 18...36 V DC, maximum 160 mA
Digital inputs	measurement range switching	E1 and E2, PNP, galvanically isolated
Output	Current output Switching output	4...20 mA, galvanically isolated 24 V DC, maximum 100 mA, PNP, short-circuit proof
Weight	Depending on process connection: see Dimensions tables, page 7	

Accuracy ITM-4				
Measurement range	**0...100 NTU 0...25 EBC**	**101...1000 NTU 26...250 EBC**	**1001...5000 NTU 251...1250 EBC**	**Annotation**
Resolution	0.1 %	1 %	10 %	display
Reproducibility (with the same process conditions)	±2 %	±3 %	±4 %	of measurement value ±1 resolution step
Absolute accuracy acc. to FNU-formazine-scale	±3 %	±4 %	±6 %	of measurement value ±1 resolution step

Mechanical Connection / Installation

- **The device has to be installed in that way that the fitting is entirely filled with media.**
  Air or air bubbles are detected as turbidity.

- **Correct installation:**
  - Before or into an ascending pipe.

- **Wrong installation:**
  - Before or into a descending pipe.
  - Into the highest point of a pipe, air bubbles will concentrate there

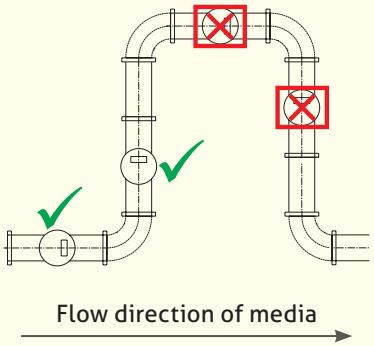

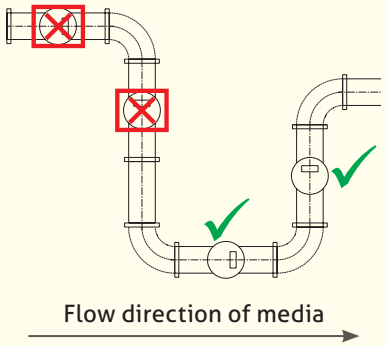

- Pay attention to the above-mentioned drawings!

- Do not open the screws at the optical block!

Conventional Usage

- Not suitable for applications in explosive areas.
- Not suitable for applications in security-relevant equipments (SIL).

Advice to EMV

Applicable directives:
- Electromagnetic Compatibility Directive 2004/108/EC
- The CE label confirms compliance of this product with the applicable EC directives.
- You have to guarantee the compliance of all guidelines applicable for the entire equipement.

Advice to Pressure Equipment Directive

ITM-4 turbidity meters are pressure accessories as defined by the Pressure Equipment Directive PED 97/23/EC and must therefore be subjected to a conformity assessment procedure. The devices are approved for „Fluid Group 2 Media". By definition, Article 3 Paragraph 3 Sound Engineering Practice applies.

Turning the display

1. Loosen the set screws (1) on top and bottom resp.on the left and right.
2. Turn the head to the desired position.
   Turnig is possible only in steps of 90°!
3. Tighten the two set screws (1).

Fig.: Turning the display

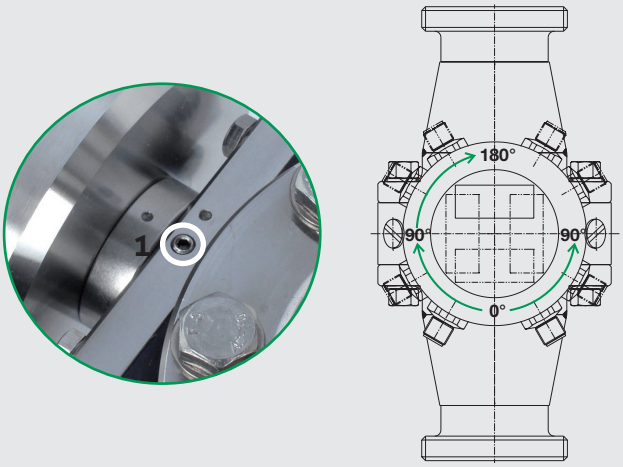

External measurement range selection

- The turbidity meter is delivered with measurement range 1 (0...1000 NTU / 0-1000 EBC = 4...20 mA)
- Range 2 (E1=24 V DC), range 3 (E2=24 V DC) and range 4 (E1=24 V DC and E2=24 V DC) can be chosen by means of the ratedsignal +24 V DC (18...36 V DC) at the inputs on pin 7, 8 and 9. Please take note of the connection plan and the table below.
- If these inputs are not connected, measurement range 1 always will be active!

E1*	E2*	Measurement range
0	0	1
1	0	2
0	1	3
1	1	4

*0 = 0 V DC / 1 = 24 V DC
The digital inputs E1and E2 are DC decoupled to the power supply.
Reference ground: pin 9

Electrical connection ITM-4

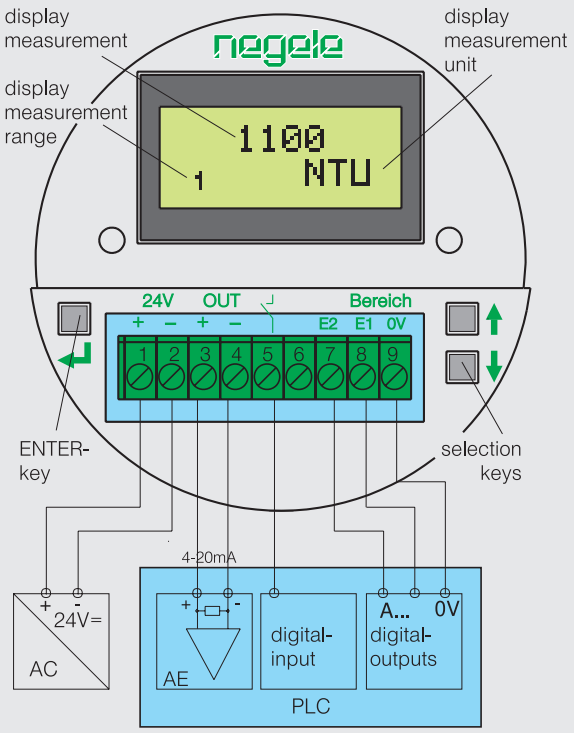

Connecting diagramm M12 plug-in ITM-4/.../M12

M12 plug-in left (4-pin)
power supply /
outputs 4...20 mA

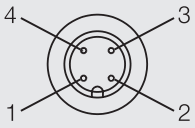

1: + 24 V power supply
2: + output turbidity
3: - output turbidity
4: - power supply

M12 plug-in right (5-pin)
switching output /
digital inputs

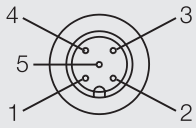

1: E1 input
2: E2 input
3: 0 V input
4: not connected
5: switching output

Note: Switching output

- If the output current is higher than the specified current (80 mA) an electronic fuse switches off the output.
- To reset the switch output disconnect the output (or deactivate and activate the turbidity meter).

Operation diagramm ITM-4

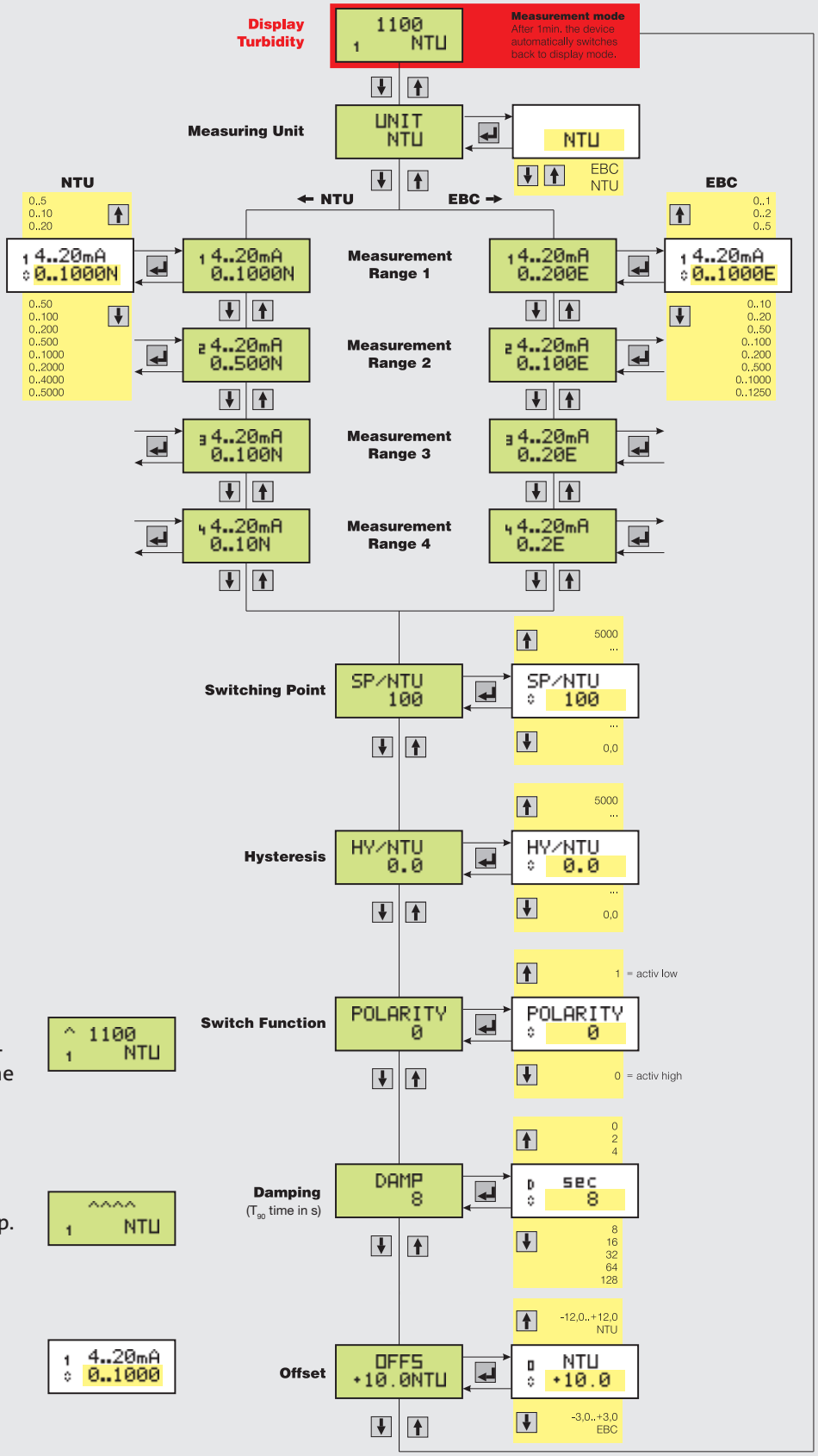

Legend

^-Symbol
"current output overload": will be displayed if the measured value is higher than the measurement range.
I_{out}: > 20 mA (max. 21.6 mA)

^^^^-Symbol
the current measured value is higher than 5000 NTU resp. 1250 EBC
I_{out}: > 20 mA (max. 21.6 mA)

1 (top left)
current editable measurement
◊-Symbol (bottom left)
the value aside is now editable by using the arrow-buttons

Optical block for DN50 to DN100

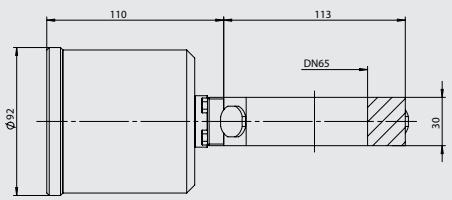

Optical block for DN25 to DN40

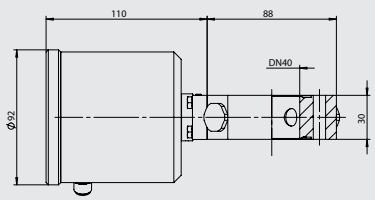

Milk pipe connection ITM-4DW/GG DN50 to DN100

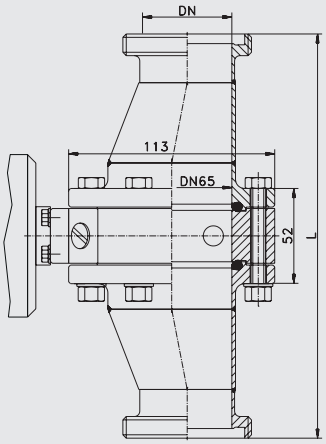

Milk pipe connection ITM-4DW/GG for DN25 to DN40

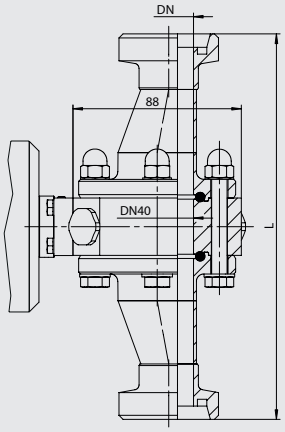

Tri-Clamp ITM-4DW/TC DN50 to DN100

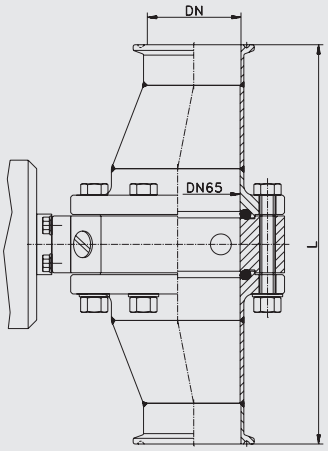

Tri-Clamp ITM-4DW/TC for DN25 to DN40

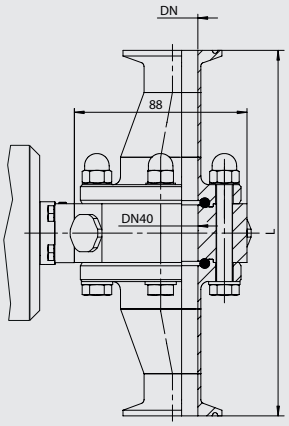

DIN flange ITM-4DW/DF DN50 to DN100

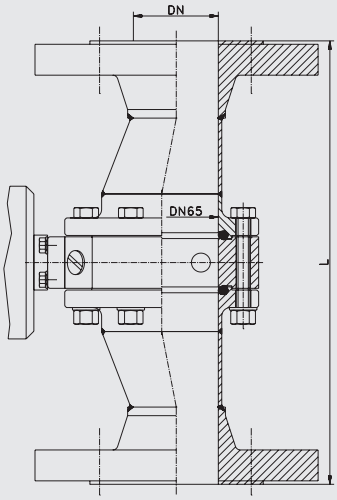

DIN flange ITM-4DW/DF for DN25 to DN40

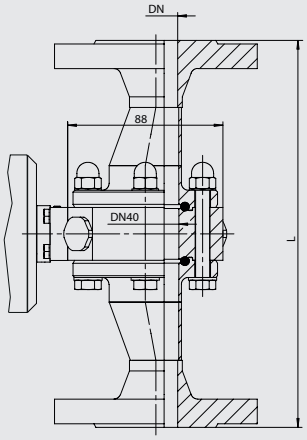

Total length L of the housing (tolerance ±2 mm)				
Process connection/ nominal width	**Milk pipe (-GG) as per DIN 11851**		**DIN flange (-DF) as per DIN 2632/33**	
DIN DN25	201 mm	3 kg	219 mm	7 kg
DIN DN40	143 mm	3 kg	161 mm	8 kg
DIN DN50	236 mm	4 kg	256 mm	10 kg
DIN DN65	250 mm	5 kg	290 mm	11 kg
DIN DN80	250 mm	5 kg	260 mm	12 kg
DIN DN100	373 mm	5 kg	369 mm	13 kg

Total length L of the housing for Tri-Clamp process connection (-TC) as per DIN 32676 (tolerance ±2 mm) with Tri-Clamp size									
Nominal width DIN	**DN25**	**TCØ**	**Weight**	**DN40**	**TCØ**	**Weight**	**DN50**	**TCØ**	**Weight**
	186 mm	50.5 mm	3 kg	120 mm	50.5 mm	3 kg	209 mm	64 mm	5 kg
Nominal width ASME	**DN 1"**	**TCØ**	**Weight**	**DN 1.5"**	**TCØ**	**Weight**	**DN 2"**	**TCØ**	**Weight**
	208 mm	50.5 mm	3 kg	138 mm	50.5 mm	3 kg	223 mm	64 mm	4 kg
Nominal width DIN	**DN65**	**TCØ**	**Weight**	**DN80**	**TCØ**	**Weight**	**DN100**	**TCØ**	**Weight**
	256 mm	91 mm	5 kg	216 mm	106 mm	5 kg	321 mm	119 mm	5 kg
Nennweite ASME	**DN 2.5"**	**TCØ**	**Weight**	**DN 3"**	**TCØ**	**Weight**	**DN 4"**	**TCØ**	**Weight**
	166 mm	77.5 mm	4 kg	172 mm	91 mm	5 kg	308 mm	119 mm	5 kg

Transport/Storage

- No outdoor storage
- Store in an area that is dry and dust-free
- Do not expose to corrosive media
- Protect against solar radiation
- Avoid mechanical shock and vibration
- Storage temperature 0...40 °C
- Relative humidity max. 80%

Cleaning / Maintenance

- Do not use sharp items or aggressive detergents for cleaning the optics.
- When using a pressure washer, do not point the nozzle directly at the electrical connections.

Reshipment

- Sensors and process connection must be clean and must not be contaminated with hazardous media and/or heat-conductive paste. Note the cleaning information!
- To avoid damage of the equipment, use suitable transport packaging only.

Disposal

- This instrument is not subject to the WEEE directive 2002/96/EC and the respective national laws.
- Give the instrument directly to a specialized recycling company and do not use the municipal collecting points.

Order Code

ITM-4DW (Material PPSU with drinking water certification)

Process connection for DN40 Optics

TC25	(Nominal width DN25; Tri-Clamp process connection)
TC40	(Nominal width DN40; Tri-Clamp process connection)
TC50	(Nominal width DN50; Tri-Clamp process connection)
TC65	(Nominal width DN65; Tri-Clamp process connection)
TC80	(Nominal width DN80; Tri-Clamp process connection)
TC100	(Nominal width DN100; Tri-Clamp process connection)
TC1	(Nominal width ASME 1"; Tri-Clamp process connection)
TC1.5	(Nominal width ASME 1½"; Tri-Clamp process connection)
TC2	(Nominal width ASME 2"; Tri-Clamp process connection)
TC2.5	(Nominal width ASME 2½"; Tri-Clamp process connection)
TC3	(Nominal width ASME 3"; Tri-Clamp process connection)
TC4	(Nominal width ASME 4"; Tri-Clamp process connection)
GG25	(Nominal width DN25; milk pipe process connection DN25 as per DIN 11851)
GG40	(Nominal width DN40; milk pipe process connection DN40 as per DIN 11851)
GG50	(Nominal width DN50; milk pipe process connection DN50 as per DIN 11851)
GG65	(Nominal width DN65; milk pipe process connection DN65 as per DIN 11851)
GG80	(Nominal width DN80; milk pipe process connection DN80 as per DIN 11851)
GG100	(Nominal width DN100; milk pipe process connection DN100 as per DIN 11851)
DF25	(Nominal width DN25; DIN flange process connection as per DIN 2632/33)
DF40	(Nominal width DN40; DIN flange process connection as per DIN 2632/33)
DF50	(Nominal width DN50; DIN flange process connection as per DIN 2632/33)
DF65	(Nominal width DN65; DIN flange process connection as per DIN 2632/33)
DF80	(Nominal width DN80; DIN flange process connection as per DIN 2632/33)
DF100	(Nominal width DN100; DIN flange process connection as per DIN 2632/33)

Electrical connection

X	(2 x cable screw fitting M16 x 1.5)
M12	(2 x M12 connector; 1.4305)

ITM-4DW / GG65 / M12

Accessories

PVC-cable with M12-connection, 1.4305 (303), IP 69 K, unshielded

M12-PVC / 4-5 m	PVC-cable 4-pin, length 5 m
M12-PVC / 4-10 m	PVC-cable 4-pin, length 10 m
M12-PVC / 4-25 m	PVC-cable 4-pin, length 25 m
M12-PVC / 5-5 m	PVC-cable 5-pin, length 5
M12-PVC / 5-10 m	PVC-cable 5-pin, length 10 m
M12-PVC / 5-25 m	PVC-cable 5-pin, length 25 m

PVC-cable with M12-connection, brass nickel-plated, IP 67, shielded

M12-PVC / 4G-5 m	PVC-cable 4-pin, length 5 m
M12-PVC / 4G-10 m	PVC-cable 4-pin, length 10 m
M12-PVC / 4G-25 m	PVC-cable 4-pin, length 25 m
M12-PVC / 5G-5 m	PVC-cable 5-pin, length 5 m
M12-PVC / 5G-10 m	PVC-cable 5-pin, length 10 m
M12-PVC / 5G-25 m	PVC-cable 5-pin, length 25 m
CERT / 2.2	factory certificate 2.2 acc. to EN10204 (only product contacting surface)
CAL / ITM-4	factory calibration certificate for turbidity meter ITM-4

PVC-cable with M12-connection

Copyright© 2008 REGOM INSTRUMENTS s.r.o.

Bez souhlasu REGOM INSTRUMENTS s.r.o. není dovoleno texty či obrazové materiály modifikovat, kopírovat, distribuovat, přenášet, zobrazovat, reprodukovat, publikovat, nebo pomocí nich vytvářet pozměněné materiály.

www.regom.com