Capacitive Limit Switch Pharma NCS

Application/Specified usage

- Limit detection of liquid media even with low or no water content e.g. alcohols or oils with a dielectric constant ε_r (Dk) ≥ 2

Application examples

- Limit detection in vessels or pipes
- Product monitoring in pipes
- Pump/dry running protection
- Detection of WFI (water for injection)

Hygienic design/Process connection

- Hygienic process connection with CLEANadapt
- Conforming to 3-A Sanitary Standard for versions with DIRECTadapt
- All wetted materials are FDA-conform
- Sensor completely made of stainless steel, sensor tip made of PEEK
- Complete overview of process connections: see order code
- The Anderson-Negele CLEANadapt system offers a flow-optimized, hygienic and easily sterilizable installation solution for sensors.

Features

- CIP/SIP cleaning up to 143 °C/120 min (289 °F/120 min)
- Capacitive measuring principle
- Independent of the conductivity
- Short response time (< 1 s)
- Defined position of the M12-plug
- Reversible output (full / empty active)
- Heated electronic to avoid condensation
- Insensitive to foam and adherence
- Simulation of sensor status possible

Options/Accessories

- Version with spacer (option H) for isolated vessels or permanent process temperatures up to 143 °C
- NPN output (Open Collector)
- M12-plug and matching cable assembly
- Heating element switched off for extension of the temperature range

Measuring principle

The capacity of a capacitor is affected by 3 factors: **distance** and **size of the electrodes** as well as the **kind of medium** between the electrodes. Using the capacitive sensors only the kind of medium is of interest cause the others are constant.
The electrode of the sensor and surface of tank can be seen as capacitor, the medium as dielectric fluid. Caused by the higher Dk-value of the medium compared to air the capacity increases if the sensor is covered with the medium. The change of capacity is evaluated by electronics and converted into a corresponding switching order. This functional principle requires that the sensor tip is completely covered with medium. That way the sensor is insensitive to foam and adherences.

Authorizations

FDA

3-A 74-06

NCS-3xP with Tri-Clamp

NCS-6xP for EPA-8

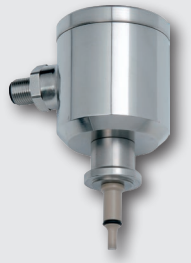

NCS-8xP for EPA-18

Measuring principle

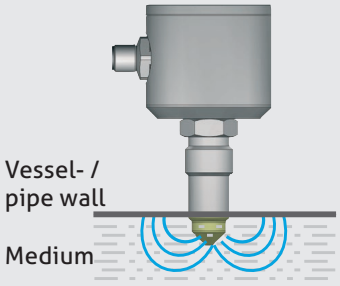

Specification		
Process connection	thread NCS-0xP Clamp NCS-6xP Clamp NCS-8xP direct connection NCS-3xP	M12 x 1.5, G1/2" CLEANadapt tightening torque max. 5...10 Nm EPA-8 PHARMadapt EPA-8 PHARMadapt overview see order code on page 8
Materials	connection head connection piece spacer sensor tip NCS-0xP sensor tip NCS-3xP sensor tip NCS-6xP sensor tip NCS-8xP sealing (depending on type)	stainless steel 1.4301 (AISI 304) stainless steel 1.4301 (AISI 304) stainless steel 1.4301 (AISI 304) PEEK acc. to USP class VI, 1.4435 (AISI 316L) with 3.1 cert. PEEK acc. to USP class VI PEEK acc. to USP class VI, 1.4435 (AISI 316L) with 3.1 cert. PEEK acc. to USP class VI EPDM
FDA approval	PEEK EPDM	21 CFR 177.2415 21 CFR 177.2600
Surface	product contacting optional	$R_a \leq 0.8$ µm $R_a \leq 0.6$ µm (not available for -0xP, -6xP, -3xP...TC3/4)
Delta Ferrite DF		< 1.0 %
Weight		approx. 500 g (depending on process connection)
Operating pressure		max. 10 bar
Protection class		IP 69 K
Electrical connection		M12-plug 1.4301 (AISI 304)
Supply		16...32 V DC
Output	 optional	PNP (active 50 mA, short-circuit-proof NPN (active 50 mA, short-circuit-proof)
Switching function	adjustable by polarity of support	high active (sensor wetted: 'high') low active (sensor free : 'high')
Status display		LED
Measuring range	NCS-01P, -31P, -61P, -81P NCS-02P, -32P...TC3/4, -62P NCS-32P...TC1, -32P...TC2, -82P	Dk ≥ 20 Dk ≥ 5 Dk ≥ 2
Switching threshold		see page 5: "Adjustment of threshold"

Temperature range

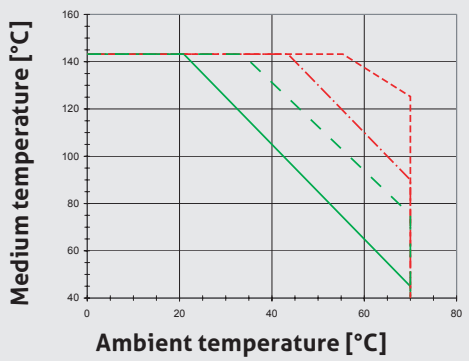

- **Continuous temperature limit** with heater
- **Temperature excursion (60 min)** with heater
- **Continuous temperature limit** without heater
- **Temperature excursion (60 min)** without heater

Supply/Power input

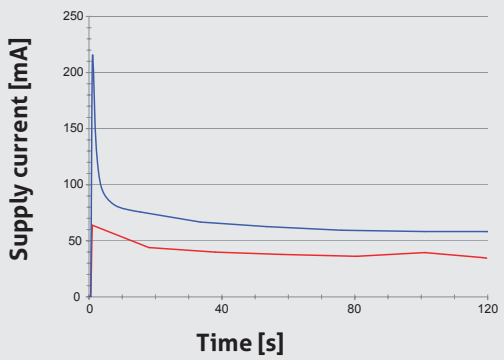

- **U_b = 24 V, T_u = 20 °C**
- **U_b = 32 V, T_u = -15 °C**

U_b: Supply voltage
T_u: Ambient temperature

NCS-0xP with EMK-032

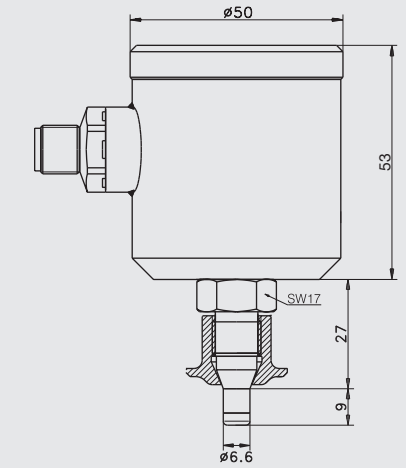

NCS-6xP (EPA-8)

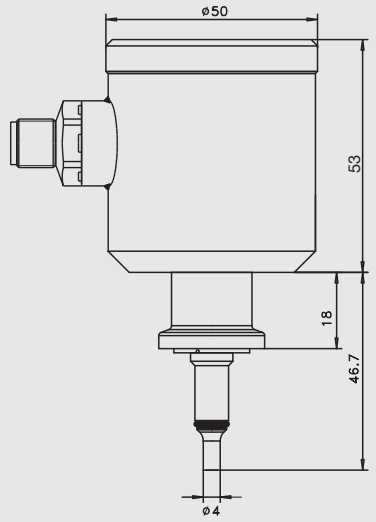

NCS-8xP (EPA-18)

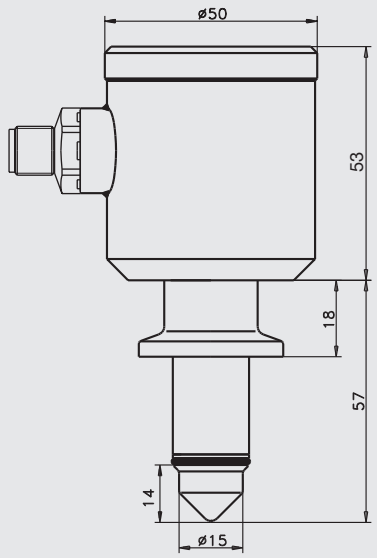

NCS-3xP Tri-Clamp TC3/4

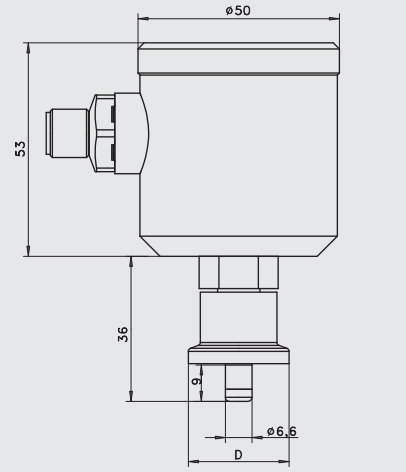

NCS-3xP Tri-Clamp TC1 / TC2

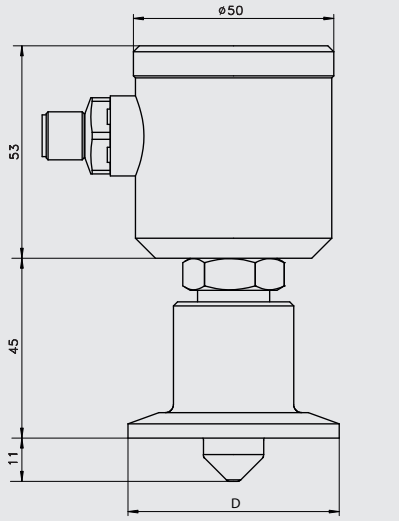

NCS-3xP Varivent®

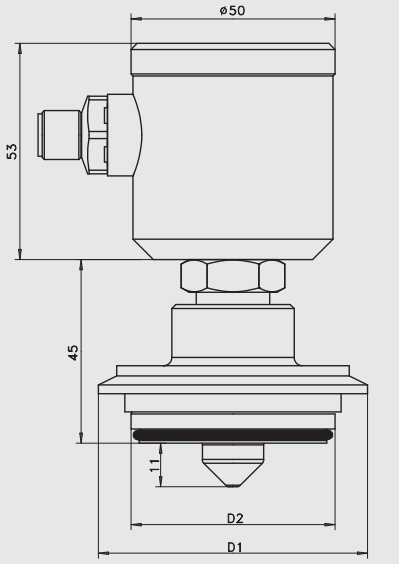

Dimension table Tri-Clamp

Type	D [mm]
TC3/4	25
TC1	50.5
TC2	64

Dimension table Varivent®

Type	Varivent® Type	D1 [mm]	D2 [mm]
V10	B	53	31
V25	F	66	50
V40	N	84	68

NCS-3xP BioControl

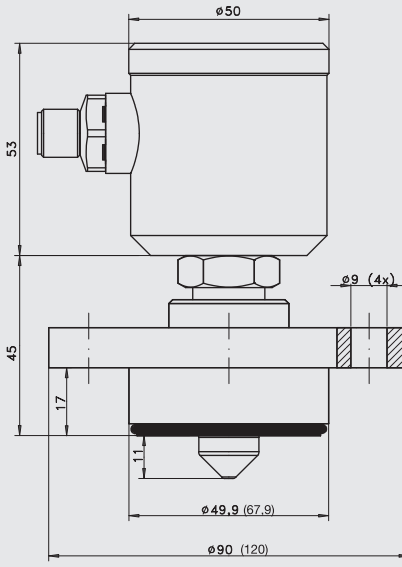

NCS-8xP / H

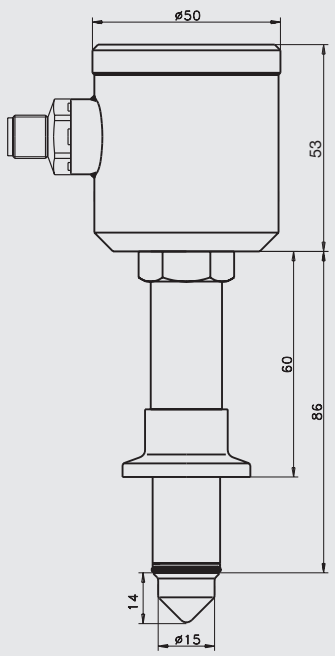

NCS-3xP Ingold®/Fermenter

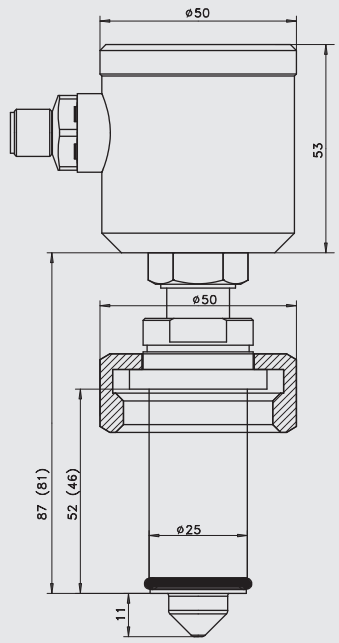

Conventional usage

- Not suitable for applications in explosive areas.
- Not suitable for applications in security-relevant equipments (SIL).

Fig. 1: Build-in positions

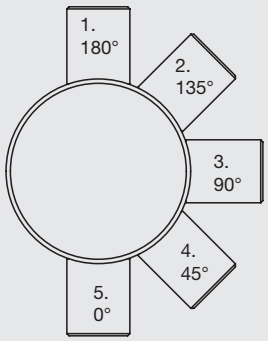

Mechanical connection/installation

To guarantee a definite function, the sensor tip must be completely covered by the medium! A minimum filling level in the pipe is necessary to ensure that the sensor operates. This varies according to the mounting position:

- for position 1: 100 %
- for position 2: ca. 92 %
- for position 3: ca. 60 %
- for position 4: ca. 30 %
- for position 5: min. 11 mm

Position 2: Ideal installation as high alarm in horizontal lines; ensures that isolation of sensor tip by air bubble is prevented.

Position 4: Ideal installation as low alarm in horizontal lines; ensures that sensor tip is not covered with residues of medium.

- Do not use non-conducting sealants such as PTFE (Teflon) or similar.

Conditions for a measuring point according to 3-A Sanitary Standard 74-06

- The sensors NCS-0xP, NCS-3xP with process connection TC and V, NCS-6xP and NCS-8xP conforming to the 3-A Sanitary Standard.
- The sensors are designed for CIP-/ SIP-cleaning. Maximum 143 °C / 120 minutes.
- Only with the build-in system CLEANadapt (EMZ, EMK, EHG with pipe diameter > DN25, ISO 20 and 1", Adapter AMC and AMV) allowed.
- Using the weld in sleeve EMZ, EMK the weld must comply to the requirements of the current 3-A Sanitary Standard.
- Mounting position, self draining and the position of the leackage hole must be in accordance to current 3-A Sanitary Standard.

Electrical connection NCS-x1P (for U_b 24 V DC)		
Strip terminal	**High active**	**Low active**
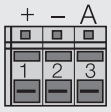	1: +24 V DC 2: 0 V 3: output	1: 0 V 2: +24 V DC 3: output
M12-plug	**High active**	**Low active**
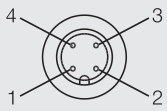	1: +24 V DC 2: not connected 3: 0 V 4: output	1: 0 V 2: not connected 3: +24 V DC 4: output

Electrical connection NCS-x2P (for U_b 24 V DC)		
Strip terminal	**High active**	**Low active**
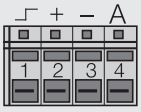	1: control input 2: +24 V DC 3: 0 V 4: output	1: control input 2: 0 V 3: +24 V DC 4: output
M12-plug	**High active**	**Low active**
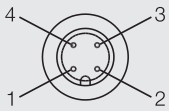	1: +24 V DC 2: control input 3: 0 V 4: output	1: 0 V 2: control input 3: +24 V DC 4: output

Handling/operation NCS-x2P

With the control input, the threshold of the limit switches with enhanced measurement range can be switched to threshold of Dk = 50 while operating.
This could be useful to avoid false alarm at process steps with increasing frothing, CIP-cycles or similar.

Control input	Threshold (for U_b 24 V DC)
0 V or not connected	like setting with rotaty switch
+24 V DC	Dk = 50 fix

Electronics NCS-x2P

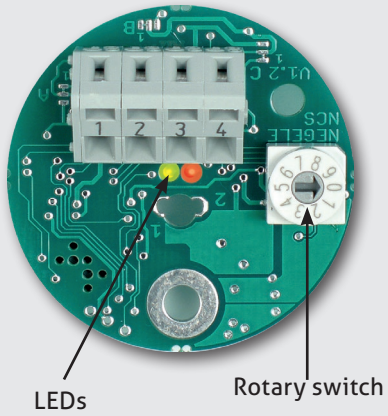

LED status display					
Sensor tip	**NCS-x1P**		**NCS-x2P control input 0 V**		**NCS-x2P control input 24 V**	
covered						
not covered						

Adjustment of threshold with rotary switch			
Switch setting	**Dk-value ≥ 20 NCS-x1P**	**Dk-value ≥ 5 NCS-02P NCS-32P ... TC3/4 NCS-62P**	**Dk-value ≥ 2 NCS-32P ... TC1 NCS-32P ... TC2 NCS-82P**
0	output off	output off	output off
1	output on	output on	output on
2	20	5	2
3	25	6	3
4	30	7	4
5	35	8	5
6	40	9	10
7	50	10	12
8	60	15	15
9	70	20 *	20 *

* Please note information box above.

Showcase of media and specific Dk-value:
(the exemplarily Dk-values can vary acc. to different outside influences like temperature, fabrication, source etc.)

Medium	Dk-value
water	81
formic acid	57
methanol	33
water (demineralized)	29
ethanol	25
isopropanol	18
glycerin	13
fatty acid	2

Example
At switch setting 5 (Dk = 35) the NCS-x1P will detect media with a dielectric constant of Dk ≥ 35.

Information process connection

The complete assortment as well as the order code for build-in systems, weld-in sleeves and adapters you will find in the product information CLEANadapt.

Samples of possible process connections

Type	NCS-0xP				
					
Process connection	**Build-in system EHG** (DIN 11850 series 2)	**Weld-in sleeve**	**Weld-in ball**	**Collar sleeve**	**APV-Inline**

Information process connection

Detailed information for process connection PHARMadapt EPA you will find in product information build-in system PHARMadapt EPA.

Process connections PHARMadapt EPA

Type	NCS-6xP	NCS-8xP
	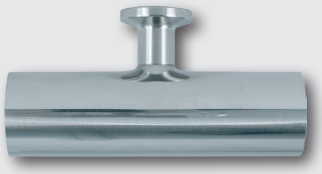	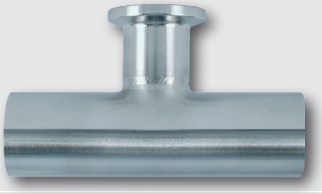
Process connection	**EPA-8**	**EPA-18**

Order code

Clamp-tension ring, material 1.4301 bright

SRC-05	for NCS-6xP
SRC-10	for NCS-8xP

Please note:
The clamp ring is not included in delivery and must be ordered separately!

Sealing ring, material EPDM

DRE-5	for NCS-6xP
DRE-15	for NCS-8xP

TAG	labeled acc. to customer preference, material 1.4301 (AISI 304) bright

Clamp ring SRC-10 for EPA-18

Identification with TAG-plate

Accessories

M12-K/4	M12-connection 4-pin, IDC technique, with plastic knurled screw

PVC-cable with M12-connection made of 1.4305, IP 69 K, unshielded

M12-PVC / 4-5 m	PVC-cable 4-pin, length 5 m
M12-PVC / 4-10 m	PVC-cable 4-pin, length 10 m
M12-PVC / 4-25 m	PVC-cable 4-pin, length 25 m

PVC-cable with M12-connection, brass nickel-plated, IP 67, shielded

M12-PVC / 4G-5 m	PVC-cable 4-pin, length 5 m
M12-PVC / 4G-10 m	PVC-cable 4-pin, length 10 m
M12-PVC / 4G-25 m	PVC-cable 4-pin, length 25 m

PVC-cable with M12-connection

Cleaning/Maintenance

- In case of using pressure washers, dont't point nozzle directly to electrical connections!

Reshipment

- Sensors shall be clean and must not be contaminated with dangerous media!
- Use suitable transport packaging only to avoid damage of the equipment!

Note on CE

- Applicable directives:
  Electromagnetic Compatibility Directive 2014/30/EU
- Compliance with the applicable EU directives is identified by the CE label on the product.
- The operating company is responsible for complying with the guidelines applicable to the entire installation.

Transport/storage

- No outdoor storage
- Dry and dust free
- Not exposed to corrosive media
- Protected against solar radiation
- Avoiding mechanical shock and vibration
- Storage temperature 0...40 °C
- Relative humidity max. 80 %

Standards and guidelines

- You have to comply with applicable regulations and directives.

Disposal

- Electrical devices should not be disposed of with household trash. They must be recycled in accordance with national laws and regulations.
- Take the device directly to a specialized recycling company and do not use municipal collection points.

Order code

NCS-01P	(CLEANadapt M12, measurement range Dk ≥ 20, wetted parts PEEK (acc. to USP class VI) and stainless steel 1.4435 (AISI 316L) with 3.1 certificate acc. to EN 10204)
NCS-02P	(CLEANadapt M12, measurement range Dk ≥ 5, wetted parts PEEK (acc. to USP class VI) and stainless steel 1.4435 (AISI 316L) with 3.1 certificate acc. to EN 10204)
NCS-31P	(Direct connection, measurement range Dk ≥ 20, wetted parts PEEK (acc. to USP class VI) and stainless steel 1.4435 (AISI 316L) with 3.1 certificate acc. to EN 10204)
NCS-32P	(Direct connection, measurement range Dk ≥ 2 except NCS-32P...TC3/4 here Dk ≥ 5, wetted parts PEEK (acc. to USP class VI) and stainless steel 1.4435 (AISI 316L) with 3.1 certificate acc. to EN 10204)
NCS-61P	(PHARMadapt EPA-8, measurement range Dk ≥ 20, wetted parts PEEK (acc. to USP class VI) and stainless steel 1.4435 (AISI 316L) with 3.1 certificate acc. to EN 10204)
NCS-62P	(PHARMadapt EPA-8, measurement range Dk ≥ 5, wetted parts PEEK (acc. to USP class VI) and stainless steel 1.4435 (AISI 316L) with 3.1 certificate acc. to EN 10204)
NCS-81P	(PHARMadapt EPA-18, measurement range Dk ≥ 20, wetted parts PEEK (acc. to USP class VI))
NCS-82P	(PHARMadapt EPA-18, measurement range Dk ≥ 2, wetted parts PEEK (acc. to USP class VI))

Output

PNP	(standard, active 16...32 V DC)
NPN	(active 16...32 V DC)

Temperature Version (see diagram on page 2)

X	(standard, for process temp. up to 100 °C, CIP/SIP 143 °C / 120 min)
H	(high temperature version with spacer, for process temperatures up to 143 °C)
D	(heater deactivated at higher ambient temperature)
HD	(for process temperatures up to 143 °C at higher ambient temperature, with spacer and heater deactivated)

Process Connection (only for NCS-3xP)

I46	(Fermenter connection length 46 mm, not with temperature version H and HD)
I52	(Fermenter connection length 52 mm, not with temperature version H and HD)
TC3/4	(Tri-Clamp ¾")
TC1	(Tri-Clamp 1...1½")
TC2	(Tri-Clamp 2")
B50	(BioControl DN 40...DN 100)
B65	(BioControl DN 40...DN 100)
V10	(Varivent® DN 10...DN 15)
V25	(Varivent® DN 25)
V40	(Varivent® DN 40)

Surface quality of wetted process connection (only for NCS-3xP)

X	(standard, 0.8 µm)
-06	(0.6 µm)
-04	(0.4 µm)

NCS-32P / PNP / H / TC1 -06

Note

- All Types of NCS-...P will be delivered with window in lid and electrical connection with M12 plug.
- Varivent® is a registered trademark of GEA Tuchenhagen GmbH.
- Ingold® is a registered trademark of Mettler-Toledo GmbH.

REGOM INSTRUMENTS s.r.o.
Brabcova 1159/2
147 00 Praha 4
CZECH REPUBLIC

Tel: +420 241 402 206
Fax: +420 241 400 290
Mail: regom@regom.cz
Skype: regom.office

www.regom.cz