Pressure Control Valves

Pressure Reducing Valves DM 512, 513, 517

High Press. and Control Ranges lower than 2 bar

www.mankenberg.de | Tel. +49 (0) 451 - 8 79 75 0

MANKENBERG GmbH | Spenglerstraße 99 | D-23556 Lübeck

Technical Data

Connection DN	15 - 50
Connection G	3/8 - 2
Nominal Pressure PN	100
Inlet Pressure	up to 100 bar
Outlet Pressure	0.005 - 2 bar
K_{vs}-Value	0.2 - 5.5 m^3/h
Temperature	130 °C
Medium	liquids and gases

Description

Self-acting pressure reducers are simple control valves offering accurate control while being easy to install and maintain. They control the pressure downstream of the valve without requiring pneumatic or electrical control elements.

The DM 512, DM 513 and DM 517 pressure reducing valves are diaphragm-controlled spring-loaded proportional control valves for high inlet and low outlet pressures. They can be supplied with three types of connections: sockets, flanges and welding spigots. Each size of valve may be fitted with three different seats. The valve cone may be fitted with a soft or metallic seal.

The outlet pressure to be controlled is balanced across the control unit by the force of the valve spring (set pressure). As the outlet pressure rises above the pressure set using the adjusting screw, the valve cone moves towards the seat and the volume of medium is reduced. As the outlet pressure drops, the valve control orifice increases; when the pipeline is depressurised, the valve is open. Rotating the adjusting screw clockwise increases the outlet pressure.

The valves requires a sense line (to be installed on-site).

These valves are no shut-off elements ensuring a tight closing of the valve. In accordance with DIN EN 60534-4 and/or ANSI FCI 70-2 they may feature a leakage rate in closed position in compliance with the leakage classes III or V, optional IV.

Options

- Pressure gauge connection
- Hard-faced valve cone and seat
- For toxic or hazardous media: sealed spring cap complete with leakage line connection (incl. sealed adjusting screw). Must be installed with a leakage line capable of draining leaking medium safely and without pressure
- Various diaphragm and seal materials suitable for your medium
- Special materials such as Duplex, Superduplex, Hastelloy® or titanium, others on request
- Special connections: ANSI or JIS flanges, NPT, welding spigots; other connections on request
- Special versions on request

Operating instructions, know how and safety instructions must be observed. All the pressure has always been indicated as overpressure. We reserve the right to alter technical specifications without notice.

Nominal Pressure, K_{vs}-Values, Setting Ranges and Permissible Reduction Ratio see sheet no. DM 512/2.1.121.3

Pressure Control Valves

Pressure Reducing Valves DM 512, 513, 517

High Press. and Control Ranges lower than 2 bar

Materials		
Temperature	80 °C	130 °C
Body	G 3/8 - 1, DN 15 - 25 = C-steel G 1 1/4 - 2, DN 32 - 50 = steel welded optional CrNiMo-steel for all body sizes	
Spring Cap	steel welded optional CrNiMo-steel	
Internals	CrNiMo-steel	
Spring	CrNi-steel	CrNi-steel
Valve Seal	EU	EPDM optional FKM, PTFE
Metallic Seal	CrNiMo-steel	CrNiMo-steel
Diaphragm	EPDM	EPDM optional FKM
Protection Foil	PTFE (option)	PTFE (option)

Dimensions DM 512 [mm]				
pressure range bar	size	nominal diameter G		
		G 3/8 - 1/2	G 3/4 - 1	1 1/4 - 2
all ranges	A*	140	170	250
	B	80	80	110
	C	470	470	max. 720
0.005 - 0.07	D	500	500	850
0.02 - 0.1	D	360	360	500
0.05 - 0.4	D	270	270	360
0.1 - 0.8	D	220	220	270
0.3 - 2	D	175	175	220

Dimensions DM 513 [mm]				
pressure range bar	size	nominal diameter DN		
		DN 15 - 25	DN 32-40	DN 50
all ranges	A_1*	220	280	300
	B	80	110	110
	C	470	max. 720	max. 720
0.005 - 0.07	D	500	850	850
0.02 - 0.1	D	360	500	500
0.05 - 0.4	D	270	360	360
0.1 - 0.8	D	220	270	270
0.3 - 2	D	175	220	220

Dimensions DM 517 [mm]				
pressure range bar	size	nominal diameter G		
		G 3/8 - 1	G 1 1/4 - 1 1/2	2
all ranges	A*	220	270	300
	B	80	110	110
	C	470	max. 720	max. 720
0.005 - 0.07	D	500	850	850
0.02 - 0.1	D	360	500	500
0.05 - 0.4	D	270	360	360
0.1 - 0.8	D	220	270	270
0.3 - 2	D	175	220	220

* Overall length tolerances in acc. with DIN EN 558

Weights DM 512, 517 [kg]							
pressure range bar	nominal diameter G						
	G 3/8	G 1/2	G 3/4	G 1	G 1 1/4	G 1 1/2	G 2
0.005 - 0.07	36	36	37	38	75	75	75
0.02 - 0.1	40	40	41	42	47	47	47
0.05 - 0.4	37	37	38	39	39	39	39
0.1 - 0.8	25	25	26	27	37	37	37
0.3 - 2	19	19	20	21	35	35	35

weights for DM 513 on request

Customs Tariff Number
84811019

Special designs on request.
The pressure has always been indicated as overpressure.
Mankenberg reserves the right to alter or improve the designs or specifications of the products described herein without notice.

Dimensional Drawing

DM 512, DM 517

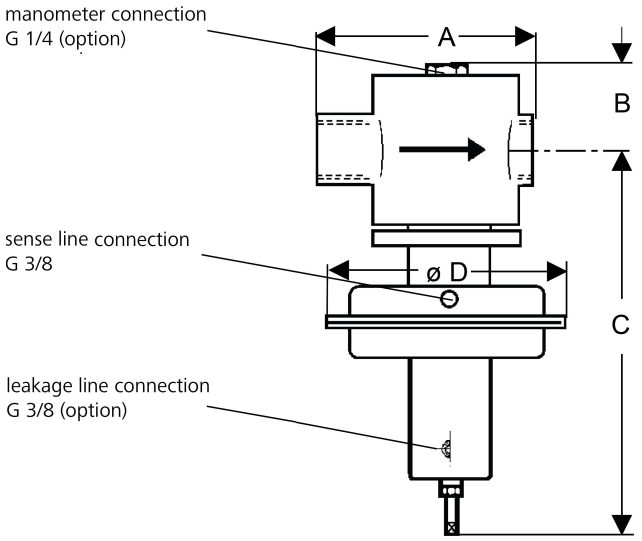

DM 513

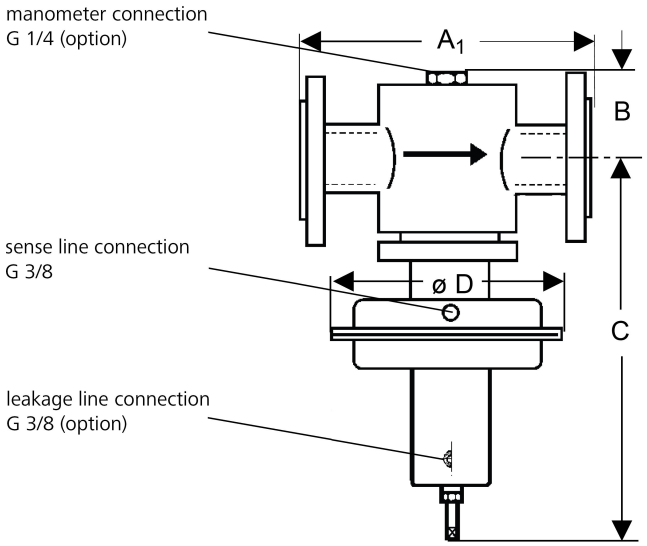

Recommended Installation

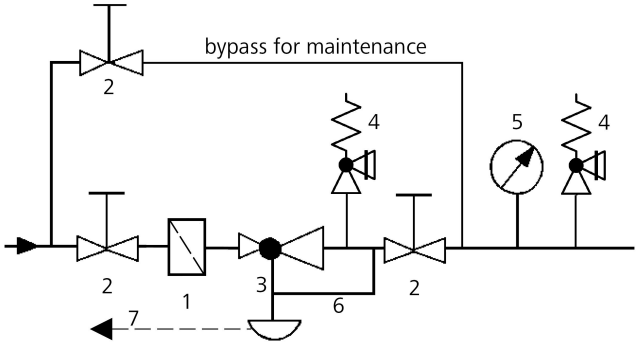

1 Strainer*
2 Shut-off Valves
3 Pressure Reducer*
4 Safety Valves*
5 Pressure Gauge
6 Sense Line G 3/8
7 Leakage Line G 3/8 (option)

Sense line connection 10 - 20 x DN behind the valve
*Use MANKENBERG-Products

www.mankenberg.de | Tel. +49 (0) 451 - 8 79 75 0
MANKENBERG GmbH | Spenglerstraße 99 | D-23556 Lübeck
Page No. DM 512, 513, 517/2.1.181.2 - Standing 05.02.2018

Pressure Control Valves

Pressure Reducing Valves DM 512, 513, 517

High Press. and Control Ranges lower than 2 bar

K_{vs}-Values [m^3/h]								
nominal diameter								
G		3/8	1/2	3/4	1	1 1/4	1 1/2	2
DN		-	15	20	25	32	40	50
seat	I	0.2	0.2	0.25	0.25	0.4	0.4	1
	II	0.9	0.9	0.9	0.9	2.5	2.5	3.5
	III	1.7	1.8	2	2.2	3.9	3.9	5.5

Setting Ranges [bar], Nominal Pressure DM 512, 513, 517			
0.005 - 0.07	0.02 - 0.1	0.05 - 0.4	0.1 - 0.4
PN 100/1	PN 100/1	PN 100/1	PN 100/1
0.4 - 0.8	0.3 - 1	1 - 2	
PN 100/1.6	PN 100/1.6	PN 100/6	

Special designs on request.
The pressure has always been indicated as overpressure.
Mankenberg reserves the right to alter or improve the designs or specifications of the products described herein without notice.

Max. Permissible Reduction Ratio (p_1/p_2) DM 512, 513, 517				
setting range bar	seat	nominal diameter		
		G 3/8 - 1	G 1 1/4 - 1 1/2	G 2
		DN 15 - 25	DN 32 - 40	DN 50
0.005 - 0.07	I	4000	6570	4865
	II	1500	2390	1490
	III	600	1200	1010
0.02 - 0.1	I	200	1950	1445
	II	800	710	440
	III	300	355	300
0.05 - 0.4	I	1000	1020	755
	II	400	370	230
	III	150	185	155
0.1 - 0.4	I	700	510	375
	II	200	185	115
	III	90	90	75
0.4 - 0.8	I	700	510	375
	II	200	185	115
	III	90	90	75
0.3 - 1	I	300	280	205
	II	100	100	60
	III	40	50	40
1 - 2	I	300	280	205
	II	100	100	60
	III	40	50	40

www.mankenberg.de | Tel. +49 (0) 451 - 8 79 75 0
MANKENBERG GmbH | Spenglerstraße 99 | D-23556 Lübeck